臺灣嘉剛國際股份有限公司
CLAMPTEK ENTERPRISE CO., LTD.(TAIWAN)

TEL: (886)-2-2707-5928 FAX: (886)-2-2707-6018
E-mail: twmarketing@clamptek.com.tw
www.clamptek.com.tw

—

東莞市嘉剛機電科技發展有限公司
DONGGUAN CLAMPTEK ELECTRO-MECHANICAL SCIENCE & TECHNOLOGY DEVELOPING CO., LTD.

TEL: (86)-769-38937833 / 85833142 / 85833143
FAX: (86)-769-85833141
E-mail: marketing@clamptek.com
www.clamptek.com

—

NO.6, JINLONG NORTH ROAD, SANGYUAN
INDUSTRIAL PARK, DONGCHENG DISTRICT, DONGGUAN CITY, ·
GUANGDONG PROVINCE, CHINA
廣東省東莞市東城桑園工業區金龍北路6號

本公司對產品規格、設計特性均不斷研究改進，上述規格若有變更，恕不另行通知。 Specifications and design characteristics are subject to change without prior notice

Clamptek

TOGGLE CLAMPS & PNEUMATIC TOGGLE CLAMPS 快速手動、氣動夾鉗系列

CATALOGUE 2021

Clamptek®

TOGGLE CLAMPS & PNEUMATIC TOGGLE CLAMPS
快速手動、氣動夾鉗系列

CATALOGUE 2021

PROFILE OF CLAMPTEK

公司簡介

嘉剛的技術研發源於臺灣，嘉剛總部位於臺灣，生產基地設立於東莞。憑藉著强大的產品開發、製造、銷售能力，特別是在夾具夾持元件領域中獲得客戶對嘉剛品牌的認同與信賴，嘉剛人堅持不懈的辛勤努力，為中國的工業裝備業作出巨大的貢獻。嘉剛於1974年由邱魏聰哲先生創立於臺灣。1999年在東莞厚街鎮創建生產工廠。2013年為擴大生產規模，工廠搬遷至東莞東城桑園工業區的新廠區。嘉剛公司不僅生產肘節夾鉗，還重點投入開發高精密氣油壓缸、液壓站，並將產品服務線延伸到代理盈錫精密鎖定螺母、東培精密軸承、弘旺聯軸器、惟隆主軸及德國HALDER工裝夾具配件。

The technical R&D of Clamptek originated in Taiwan where its headquarter is located. Clamptek has its production base located in Dongguan. Due to its strong power in product development, manufacturing and sales capacity, and gained the brand recognition and trust from clients. With perseverance and hard work, Clamptek has made significant contribution in the industrial equipment industry.

President Mike Tsung-Che Chiu Wei established Taiwan CLAMPTEK ENTERPRISE CO., LTD. in 1974 and set up the factory in Houjie Town of Dongguan in 1999, in order to expand the production scale, the factories were transferred to the New Factory Area of Sangyuan Industrial Park of Dongcheng District of Dongguan City in 2013.

Clamptek uses the clamps as the tools for clamping and fixting. It also efficiently organized the system of manual toggle clamps, pneumatic / hydraulic clamps, hydraulic power units and precision lock nut of Yinsh, precision bearing of TPI, WLT Spindles and Halder's spring plungers all together.

CLAMPTEK QUALITY POLICY

嘉剛的品質政策

- 全員經營 — FULL-STAFF OPERATION MANAGEMENT
- 全面品管 — ENTIRELY QUALITY MANAGEMENT

FOUR MAJOR STRATEGIC BUSINESS FIELDS OF CLAMPTEK

嘉剛的四大戰略業務領域

- 肘節夾鉗系列 — TOGGLE CLAMP SERIES
- 氣油壓夾具夾持系列 — PNEUMATIC & HYDRAULIC CLAMP SERIES
  - 液壓夾持元件系列 — Hydraulic Clamp Series
  - 氣動夾持元件系列 — Pneumatic Clamp Series
- 精密非標設備 — PRECISION NON-STANDARD EQUIPMENTS
  - 液壓動力單元（液壓站） — Hydraulic Power Unit
  - 專用工作機系統 — Customized Machine Fixture System
- 高科技精密產品總代理 — AGENT OF HIGH-TECH PRECISION PRODUCTS
  - 臺灣盈錫（YINSH）精密鎖定螺母 — Precision Locknut of Yinsh (Taiwan)
  - 臺灣東培（TPI）精密軸承 — Precision Bearing of TPI (Taiwan)
  - 臺灣弘旺聯軸器 — Coupling of HW (Taiwan)
  - 惟隆主軸 — WLT Spindles
  - 德國Halder彈性定位柱塞 — Halder's Spring Plunger Series (Germany)

INDEX 產品目錄索引

VERTICAL HANDLE TOGGLE CLAMPS
垂直式夾鉗系列

009
CH-13005
CH-13005-SS
CH-13005-T
CH-13007
CH-13007-SS
CH-13007-T
CH-13008
CH-13005-HB
CH-13005-SM
CH-13007-SM

010
CH-12050
CH-12050-SS
CH-12055
CH-12060
CH-12065
CH-12070
CH-12075
CH-12080
CH-12085
CH-12050-U
CH-12050-USS
CH-12055-U

011
CH-12050-HB
CH-12050-SM
CH-12205
CH-12210
CH-12215
CH-12220

012
CH-101-A
CH-101-AI
CH-101-AIT
CH-101-AT

012
CH-101-ASS
CH-11002-B
CH-12002-B
CH-13002-B

013
CH-12130
CH-12130-SS
CH-12131
CH-12132
CH-12133
CH-12135
CH-12136
CH-12137
CH-12138
CH-12140

014
CH-12141
CH-12142
CH-12143
CH-12145
CH-12146
CH-12147
CH-12148
CH-12130-HB
CH-12130-HBL
CH-12130-SM

015
CH-12265
CH-12265-SS
CH-12270
CH-12275
CH-12280
CH-12285
CH-12290
CH-12295

015
CH-12300

016
CH-12305
CH-12310
CH-12315
CH-12320
CH-10247
CH-10248
CH-10249
CH-10250
CH-101-J
CH-101-JS
CH-101-JSB
CH-101-JSI

017
CH-10751-B
CH-10752-B
CH-11501-B
CH-11501-C
CH-11502-B
CH-11502-C
CH-12501-B
CH-12501-C
CH-12502-B
CH-12502-C
CH-13501-B
CH-13502-B

018
CH-13009
CH-14009
CH-101-B
CH-102-B
CH-102-BSS

019
CH-101-D
CH-101-D-15
CH-101-DI
CH-101-DI-15
CH-101-E
CH-101-E-20
CH-101-EI
CH-101-EI-20
CH-101-DL
CH-101-EU
CH-101-ED
CH-101-EIU
CH-101-EID

020
CH-11401
CH-12401
CH-11421
CH-12421
CH-11412
CH-12412
CH-14412
CH-13412
CH-11421-SS

021
CH-10444
CH-10448-Z
CH-10448-ZH
CH-10648

022
CH-101-K
CH-101-KI
CH-101-KF
CH-101-KS
CH-101-EL
CH-101-H

HORIZONTAL HANDLE TOGGLE CLAMPS
水平式夾鉗系列

023
CH-201-A
CH-201-AI
CH-201-AL
CH-201-AR
CH-201
CH-201-I
CH-201-L
CH-201-R
CH-201-ASS
CH-201-SS
CH-22100
CH-22105
CH-22110
CH-22115

024
CH-201-B
CH-201-BI
CH-201-BS
CH-201-BSI
CH-201-BSS
CH-201-BHB
CH-201-BSM

025
CH-225-D
CH-225-DI
CH-225-DSS
CH-225-DHB
CH-225-DSM

025
CH-225-DHBSS

026
CH-20820
CH-22165
CH-22170
CH-22175
CH-22180
CH-22185
CH-22190
CH-22195
CH-22200

027
CH-22235
CH-22240
CH-22245
CH-22250
CH-20235
CH-20236
CH-20235-SS

028
CH-20752-B
CH-21502-B
CH-22502-B
CH-23502-B
CH-24502-B
CH-20752-BSS
CH-21502-BSS
CH-201-C

029
CH-203-F
CH-203-FL
CH-202-F
CH-202-FL
CH-203-P
CH-203-FSS
CH-204-G
CH-204-GL

030
CH-204-GB
CH-204-GBL
CH-204-GBLH
CH-22005
CH-22010
CH-22015
CH-22020
CH-22025
CH-22030
CH-22035
CH-22040

031
CH-20400
CH-20100
CH-20300
CH-2300
CH-2301-B
CH-2500
CH-2501-B

031
CH-2600
CH-2601-B

032
CH-2602-B
CH-2603-B
CH-2604-B
CH-20800
CH-20800-SS
CH-21800

033
CH-21383
CH-25383
CH-21382
CH-22382
CH-21382-SS

034
CH-25382
CH-26382
CH-21385
CH-21384
CH-22384

035
CH-200-W
CH-200-WL
CH-200-WH
CH-200-WLH
CH-220-WH
CH-220-WLH
CH-20448

PUSH-PULL TOGGLE CLAMPS
推拉式夾鉗系列

037
CH-301-AM
CH-301-BM
CH-301-AMSS
CH-301-CR
CH-301-CL
CH-302-CR
CH-302-CL

038
CH-302-FM
CH-302-FMSS
CH-36092M
CH-36092MSS
CH-36003M

039
CH-36010M
CH-36012M
CH-30607M
CH-30608M
CH-36330ML

040
CH-36202M
CH-36204M
CH-36224M
CH-36202M-SS
CH-36204M-SS
CH-36224M-SS

041
CH-36330M
CH-304-CM
CH-305-CM
CH-304-EM
CH-305-EM
CH-304-HM
CH-305-HM
CH-304-EM-SS

042
CH-305-CMT
CH-304-EML
CH-305-HMY
CH-305-BM
CH-304-HMY

043
CH-36015-T
CH-30510M
CH-30511M

044
CH-30509M
CH-30609M
CH-30519M
CH-30619M

045
CH-30250
CH-30450
CH-30600
CH-31200
CH-32500
CH-35000

046
CH-30600HL
CH-31200HL
CH-32500HL
CH-35000HL

046
CH-30600PR
CH-31200PR
CH-32500PR

047
CH-36006
CH-36070
CH-302-DM
CH-30282M
CH-302-DMSS

048
CH-30290M
CH-30292M
CH-36020
CH-36020-K
CH-31501

049
CH-36060
CH-303-EM
CH-303-EMK
CH-30513

LATCH TYPE CLAMPS
門閂式夾鉗系列

051
CH-40323
CH-431
CH-40341
CH-40323-SS
CH-431-SS
CH-40341-SS
CH-40324
CH-40334
CH-40344
CH-40324-SS
CH-40334-SS
CH-40344-SS

052
CH-40334-SS-T001
CH-40702
CH-40702-SS
CH-43101
CH-43102

053
CH-40820
CH-40840
CH-40870
CH-451
CH-452
CH-40371

053
CH-43810
CH-451-SS
CH-452-SS
CH-43810-SS

054
CH-40200
CH-D346
CH-D347
CH-D348
CH-D349
CH-40360-ST
CH-40370-LP

055
CH-40370
CH-40380
CH-40380-SS
CH-40550
CH-40580

056
CH-43110
CH-43120
CH-43150
CH-43160

TOGGLE PLIERS
擠壓式夾鉗系列

057
CH-50350
CH-50350-1
CH-50360
CH-50380
CH-50385
CH-50450

058
CH-50480
CH-51000
CH-51010
CH-51020
CH-51030

059
CH-51151
CH-51100
CH-51106
CH-51108
CH-51109

060
CH-51105
CH-51150
CH-51152
CH-511SP
CH-51111

HEAVY DUTY WELDABLES
複合組立式夾鉗系列

060
CH-60130
CH-60131

061
CH-70305
CH-70310
CH-70315
CH-70505
CH-70510
CH-70515
CH-70605
CH-70610
CH-70615

062
CH-75027M
CH-75027M-SM
CH-75048

062
CH-75078
CH-75088

063
CH-70320
CH-70300T
CH-70300B
CH-70710
CH-70715
CH-70720
CH-70725
CH-71210
CH-71215
CH-71220
CH-71225
CH-72410
CH-72415

063
CH-72420
CH-72425

064
CH-70200A
CH-70200B
CH-70730A
CH-70730B
CH-71230A
CH-71230B
CH-72430A
CH-72430B

065
CH-702-C
CH-70201
CH-702-D
CH-70203

065
CH-702-K
CH-701-C
CH-70101
CH-701-D
CH-70103
CH-701-K

PNEUMATIC TOGGLE CLAMPS
氣動式夾鉗系列

067	CH-10101-A	067	CH-20820-A	068	CH-702-DA
	CH-12050-A		CH-20830-A		CH-702-KA
	CH-12050-UA		CH-20840-A	069	CH-30600HL-A
	CH-12130-A	068	CH-36301-A		CH-31200HL-A
	CH-12132-A		CH-36003M-A		CH-32500HL-A
	CH-12265-A		CH-36330M-A		CH-30600PR-A
	CH-12275-A		CH-305-EM-A		CH-31200PR-A
	CH-10247-A		CH-702-CA		CH-32500PR-A
	CH-10249-A				

C TYPE CLAMPS
C型夾鉗系列

070	(淺喉式)	070	(淺喉式)	070	(深喉式)
	M25		M125		M50
	M38		M150		M75
	M50		M200		M100
	M75		M250		M150
	M100		M300		

F TYPE CLAMPS
F型夾鉗系列

071-071	CH-80070 CH-80325 CH-80379	CH-80325-SS CH-80379-SS
072-072	夾鉗展示架	CLAMP DISPLAY TROLLEY
073-081	通用夾鉗系列	GENERAL PURPOSE CLAMP
082-088	木工夾鉗系列	WOOD WORKING CLAMP
089-095	重型夾鉗系	METAL WORKING CLAMP
096-096	C型夾鉗	C TYPE CLAMP
097-100	深喉組合式夾鉗系列	MULTI-FUNCTION CLAMP
101-103	特殊用途夾鉗	LIMITED SPACE WORKING CLAMP
104-108	F鉗零配件	F CLAMP PARTS & ACCESSORIES

ACCESSORIES
配件系列

109-110	配件系列	ACCESSORIES

STRUCTURE OF TOGGLE CLAMP
夾鉗結構

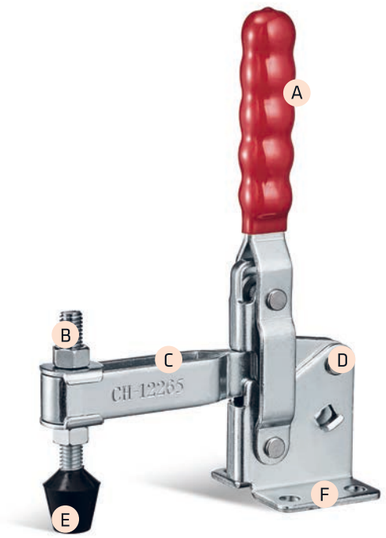

A

STRAIGHT HANDLE
直手柄

T-HANDLE
T型手柄

B

Spindle screw supplied item as CH-FC, CH-SA, CH-SF, CH-CC. Please see details in the dimension table on page 111-112.

提供的配件型號为CH-FC、CH-SA、CH-SF、CH-CC。請參見P111-P112的詳細信息。

C

U-BAR
U型壓把

SOLID BAR
實心壓把

D

RIVET

1.Standard type (hollow rivet)

2.Customized type(solid, stainless steel rivet long time using for more than 80,000,00 times.Please request by E-mail.

鉚釘

1.標準型 (空心鉚釘)

2.訂製化類型 (實心、不鏽鋼鉚釘，使用壽命超過80000次，可通過電子郵件詢問。

E

RUBBER HEAD
橡膠頭

F

FLANGED BASE
法蘭座

STRAIGHT BASE
直底座

SIDE FLANGED BASE
側法蘭底座

THE MOTION OF TOGGLE CLAMPS
夾鉗運動方式

VERTICAL TOGGLE CLAMPS
垂直式夾鉗系列

HORIZONTAL TOGGLE CLAMPS
水平式夾鉗系列

PUSH-PULL CLAMPS
推拉式夾鉗系列

LATCH TYPE CLAMPS
門閂式夾鉗系列

HEAVY DUTY WELDABLES
複合組立式夾鉗系列

TOGGLE PLIERS
擠壓式夾鉗系列

INDEX(BASIC TOGGLE ACTION)

產品基本類型

PAGE 09-22

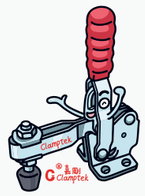

垂直式 VERTICAL TOGGLE CLAMPS

PAGE 23-35

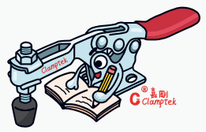

水平式 HORIZONTAL TOGGLE CLAMPS

PAGE 37-49

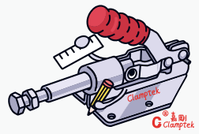

推拉式 PUSH-PULL CLAMPS

PAGE 51-56

門閂式 LATCH TYPE CLAMPS

PAGE 57-60

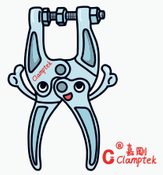

擠壓式 TOGGLE PLIERS

PAGE 60-65

複合組立式式 HEAVY DUTY WELDABLES

PAGE 67-69

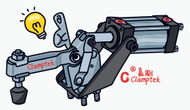

氣動式 PNEUMATIC TOGGLE CLAMPS

PAGE 70

C型鉗 C TYPE CLAMPS

PAGE 71-108

F型鉗 F TYPE CLAMPS

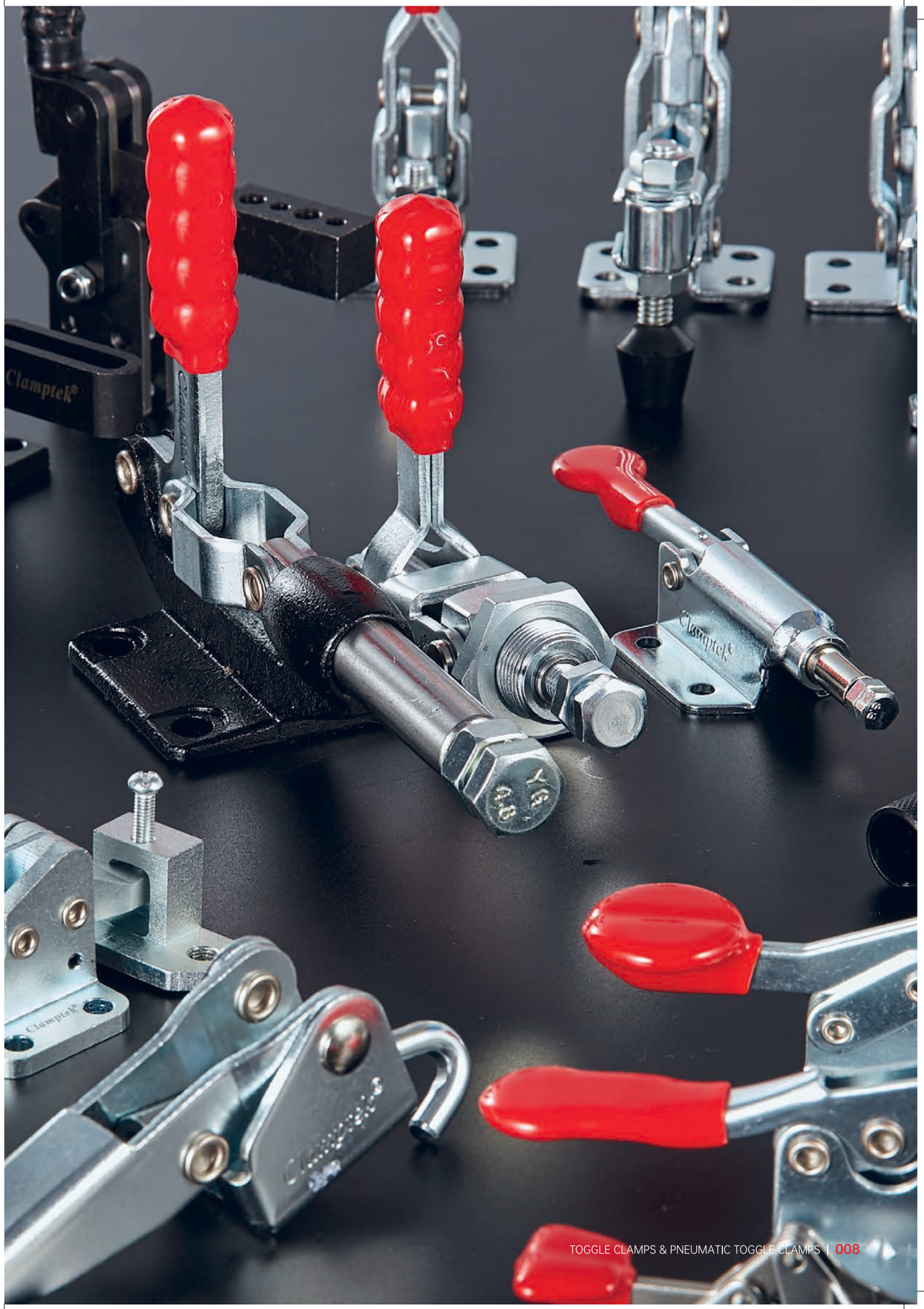

CH-13005(T) THRU CH-13008

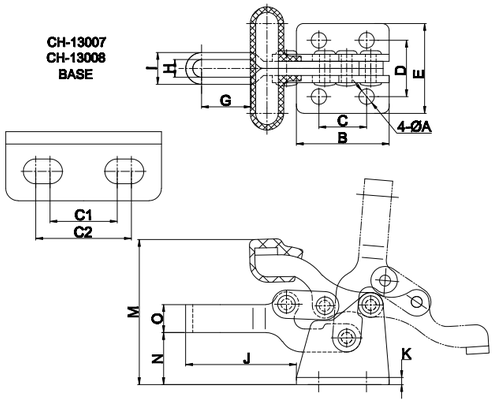

CH-13008轉動關鍵部位有耐磨套 CH-13008 product, with hardened bushing at key pivot point.

CH-13005 ■ CH-13005-SS | CH-13005-T | CH-13007 ■ CH-13007-SS | CH-13007-T | CH-13008

材質：低碳鋼，標註 ■ 的為不鏽鋼。
Material: Steel, the product with ■ mark is available in stainless steel.

型號 MODEL	夾持力 HOLDING CAPACITY(kgf)	自重 WEIGHT (g)	壓頭螺絲型號 SPINDLE SUPPLIED	壓把開啟角度 BAR OPENS	手柄開啟角度 HANDLE OPENS
CH-13005	68	60	CH-FC-10138	90°	170°
CH-13005-T	68	70	CH-FC-10138	90°	170°
CH-13007	150	230	CH-FC-56212	90°	170°
CH-13007-T	150	265	CH-FC-56212	90°	170°
CH-13008	320	590	CH-FC-38312	90°	170°
CH-13005-SS	68	60	CH-FC-10138-SS	90°	170°
CH-13007-SS	150	230	CH-FC-56212-SS	90°	170°

Unit:mm

型號 MODEL	ΦA	B	C	C1	C2	D	E	G	H Min.	I	J	K	M Max.	N	O
CH-13005	4.4	26.2	13.5	-	-	15.9	25.4	14	5	9	31.3	2	41	14.7	7.9
CH-13005-T	4.4	26.2	13.5	-	-	15.9	25.4	14	5	9	31.3	2	41	14.7	7.9
CH-13007	7x11	44	-	19	27	29.4	46	19.5	9.4	15.6	49.7	3	65	22.2	12.7
CH-13007-T	7	44	23	-	-	29	46	19.5	9.4	15.6	49.7	3	65	22.2	12.7
CH-13008	7.9x11.9	64.3	-	31	39	38	62.6	30	10.4	19.4	70.5	3	93	33.3	19.0
CH-13005-SS	4.4	26.2	13.5	-	-	15.9	25.4	14	5	9	31.3	2	41	14.7	7.9
CH-13007-SS	7x11	44	-	19	27	29.4	46	19.5	9.4	15.6	49.7	3	65	22.2	12.7

CH-13005-HB | CH-13005-SM | CH-13007-SM

材質：低碳鋼。 Material: Steel.

型號 MODEL	夾持力 HOLDING CAPACITY(kgf)	自重 WEIGHT (g)	壓頭螺絲型號 SPINDLE SUPPLIED	壓把開啟角度 BAR OPENS	手柄開啟角度 HANDLE OPENS
CH-13005-HB	68	86	CH-FC-10138	90°	170°
CH-13005-SM	68	66	CH-FC-10138	90°	170°
CH-13007-SM	150	360	CH-FC-56212	90°	170°

CH-13005-HB

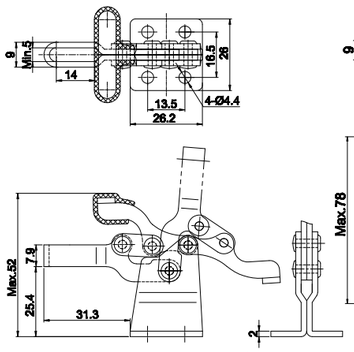

CH-13005-SM

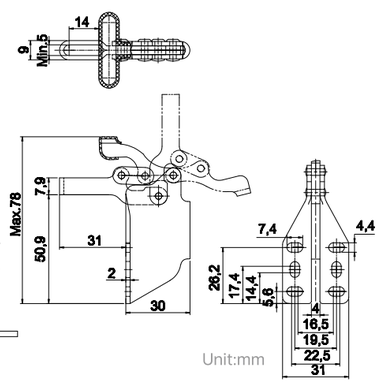

CH-13007-SM

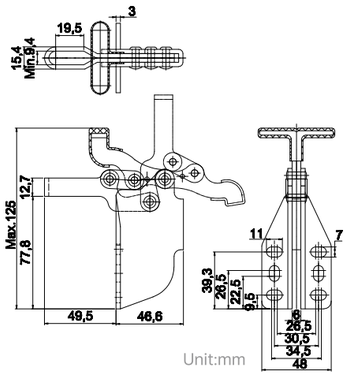

● 固定式壓把 FIXED SPINDLE ● 實心壓把 SOLID BAR ● U型壓把 U-BAR
● 法蘭座 FLANGED BASE ● 直底座 STRAIGHT BASE
● T型手柄 T-HANDLE ● 直手柄 STRAIGHT HANDLE

CH-12050 ■ CH-12050-SS | CH-12055 | CH-12060 | CH-12065 | CH-12070

CH-12075 | CH-12080 | CH-12085 | CH-12050-U ■ CH-12050-USS | CH-12055-U

材質：低碳鋼，標註 ■ 的為不鏽鋼。
Material: Steel, the product with ■ mark is available in stainless steel.

型號 MODEL	夾持力 HOLDING CAPACITY(kgf)	自重 WEIGHT (g)	壓頭螺絲型號 SPINDLE SUPPLIED	壓把開啟角度 BAR OPENS	手柄開啟角度 HANDLE OPENS
CH-12050	91	170	CH-FC-14134	100°	60°
CH-12055	91	170	CH-FC-14134	100°	60°
CH-12060	91	170	CH-FC-14134	100°	60°
CH-12065	91	170	CH-FC-14134	100°	60°
CH-12070	91	170	CH-FC-14134	100°	60°
CH-12075	91	170	CH-FC-14134	100°	60°
CH-12080	91	170	CH-FC-14134	100°	60°
CH-12085	91	170	CH-FC-14134	100°	60°
CH-12050-U	91	170	CH-FC-14134	100°	60°
CH-12055-U	91	170	CH-FC-14134	100°	60°
CH-12050-SS	91	170	CH-FC-14134-SS	100°	60°
CH-12050-USS	91	170	CH-FC-14134-SS	100°	60°

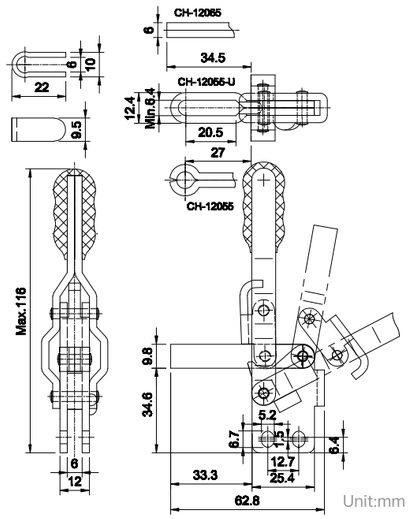

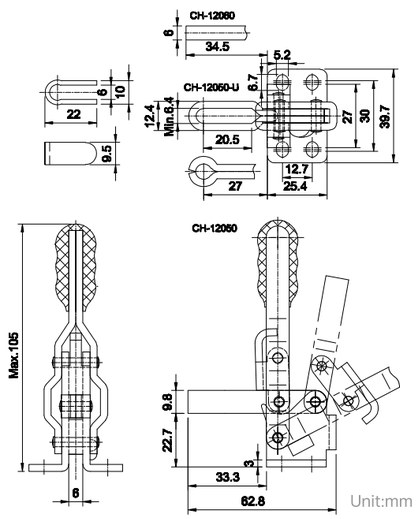

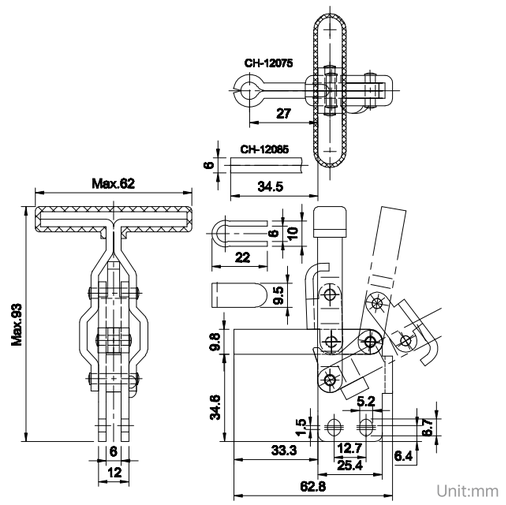

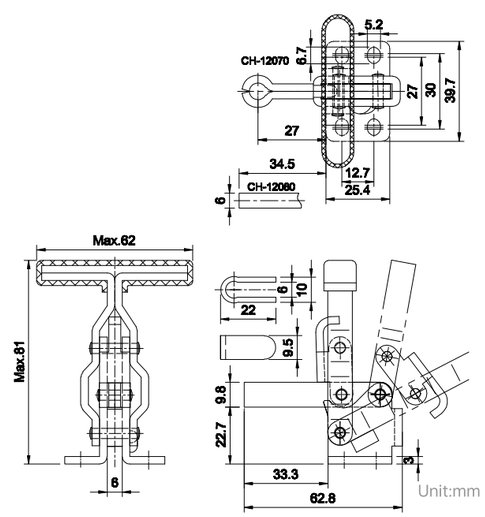

CH-12050-HB　CH-12050-SM

型號 MODEL	夾持力 HOLDING CAPACITY(kgf)	自重 WEIGHT (g)	壓頭螺絲型號 SPINDLE SUPPLIED	壓把開啟角度 BAR OPENS	手柄開啟角度 HANDLE OPENS
CH-12050-HB	91	186	CH-FC-14134	100°	60°
CH-12050-SM	91	186	CH-FC-14134	100°	60°

材質：低碳鋼。 Material: Steel.

CH-12050-HB

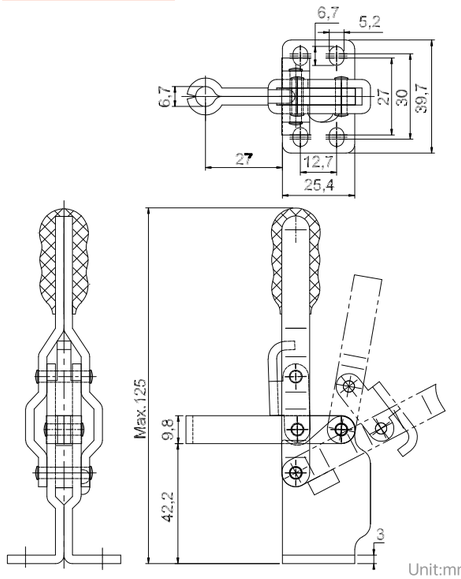

CH-12050-SM

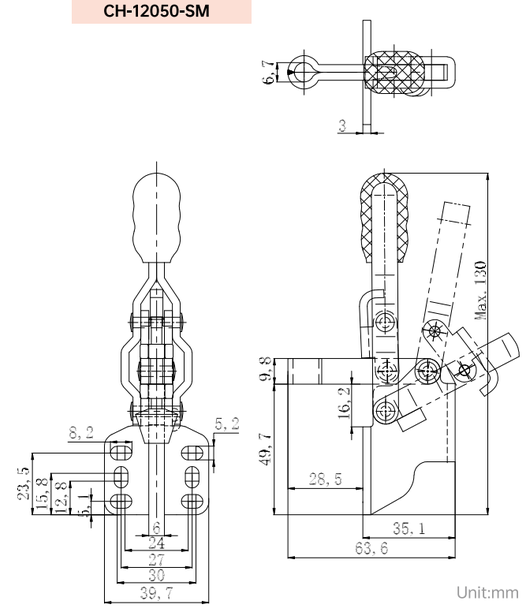

● 實心壓把 SOLID BAR　● U型壓把 U-BAR
● 法蘭座 FLANGED BASE　● 直底座 STRAIGHT BASE

CH-12205　CH-12210　CH-12215　CH-12220

材質：低碳鋼。 Material: Steel.

型號 MODEL	夾持力 HOLDING CAPACITY(kgf)	自重 WEIGHT (g)	壓頭螺絲型號 SPINDLE SUPPLIED	壓把開啟角度 BAR OPENS	手柄開啟角度 HANDLE OPENS
CH-12205	182	620	CH-FC-56212	101°	57°
CH-12210	182	620	CH-FC-56212	101°	57°
CH-12215	182	620	CH-FC-56212	101°	57°
CH-12220	182	620	CH-FC-56212	101°	57°

CH-12205 THRU CH-12220

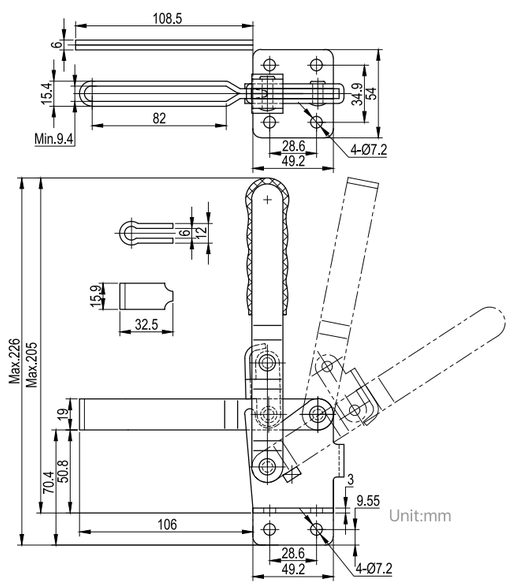

● U型壓把 U-BAR　● 法蘭座 FLANGED BASE　● 直底座 STRAIGHT BASE
● 直手柄 STRAIGHT HANDLE　● T型手柄 T-HANDLE

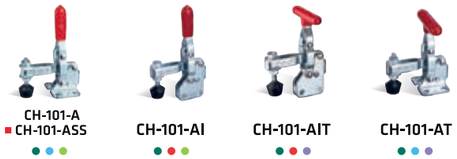

CH-101-A
■ CH-101-ASS　CH-101-AI　CH-101-AIT　CH-101-AT

材質：低碳鋼，標註 ■ 的為不鏽鋼。
Material: Steel, the product with ■ mark is available in stainless steel.

型號 MODEL	夾持力 HOLDING CAPACITY(kgf)	自重 WEIGHT (g)	壓頭螺絲型號 SPINDLE SUPPLIED	壓把開啟角度 BAR OPENS	手柄開啟角度 HANDLE OPENS
CH-101-A	50	60	CH-FC-10138	100°	56°
CH-101-AI	50	60	CH-FC-10138	100°	56°
CH-101-AIT	50	60	CH-FC-10138	100°	56°
CH-101-AT	50	60	CH-FC-10138	100°	56°
CH-101-ASS	50	60	CH-FC-10138-SS	100°	56°

CH-101-A THRU CH-101-AT

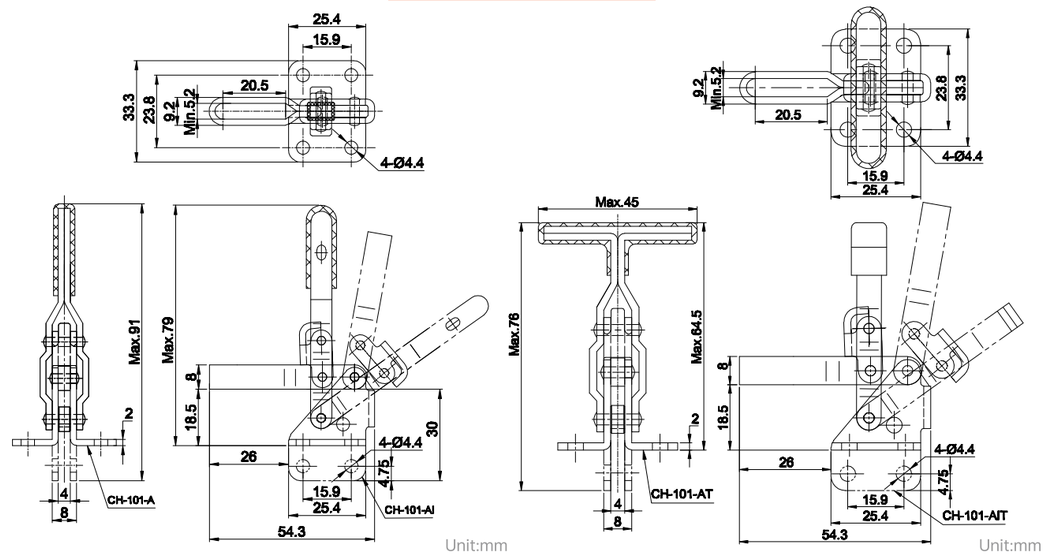

CH-11002-B THRU CH-13002-B

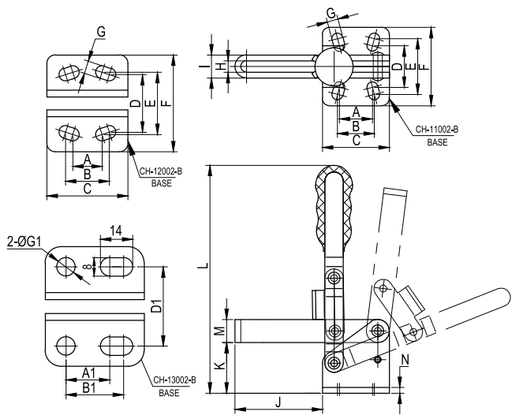

CH-11002-B　CH-12002-B　CH-13002-B

材質：低碳鋼。 Material: Steel.

型號 MODEL	夾持力 HOLDING CAPACITY(kgf)	自重 WEIGHT (g)	壓頭螺絲型號 SPINDLE SUPPLIED	壓把開啟角度 BAR OPENS	手柄開啟角度 HANDLE OPENS
CH-11002-B	75	128	CH-SA-054008	96°	66°
CH-12002-B	150	240	CH-SA-064010	108°	70°
CH-13002-B	250	520	CH-SA-086512	106°	67°

Unit:mm

型號 MODEL	A	A1	B	B1	C	D	D1	E	F	ΦG1	G	H Min.	I	J	K	L Max.	M	N
CH-11002-B	14.3	-	16	-	29	18	-	24.2	34	-	4.8	5	10	38	22	99	10	2.5
CH-12002-B	12.7	-	19	-	35	25	-	27	42	-	5.5	6.1	11.1	44	31	141	13	3
CH-13002-B	-	19	-	25	43	-	34.4	-	52	8	-	9.4	15.4	99	35	196	19	3

● 短實心壓把SHORT SOLID-BAR
● 短U型壓把SHORT U-BAR ● 長U型壓把LONG U-BAR ● 直手柄STRAIGHT HANDLE
● 法蘭座FLANGED BASE ● 直底座STRAIGHT BASE ● T型手柄T-HANDLE

材質：低碳鋼，標註 ■ 的為不鏽鋼。
Material: Steel, the product with ■ mark is available in stainless steel.

型號 MODEL	夾持力 HOLDING CAPACITY(kgf)	自重 WEIGHT (g)	壓頭螺絲型號 SPINDLE SUPPLIED	壓把開啟角度 BAR OPENS	手柄開啟角度 HANDLE OPENS
CH-12130	227	355	CH-FC-56212	100°	60°
CH-12131	227	370	CH-FC-56212	100°	60°
CH-12132	227	370	CH-FC-56212	100°	60°
CH-12133	227	400	CH-FC-56212	100°	60°
CH-12135	227	355	CH-FC-56212	100°	60°
CH-12136	227	370	CH-FC-56212	100°	60°
CH-12137	227	370	CH-FC-56212	100°	60°
CH-12138	227	400	CH-FC-56212	100°	60°
CH-12130-SS	227	355	CH-FC-56212-SS	100°	60°
CH-12140	227	340	CH-FC-56212	100°	60°

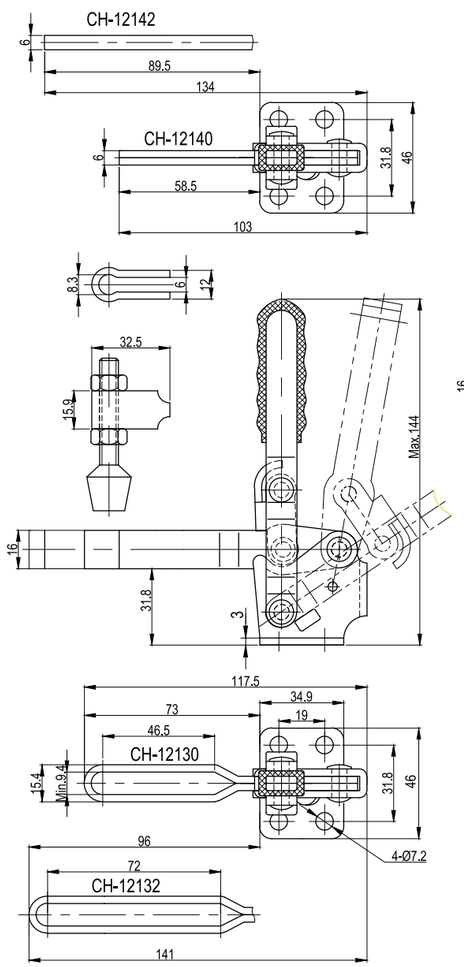

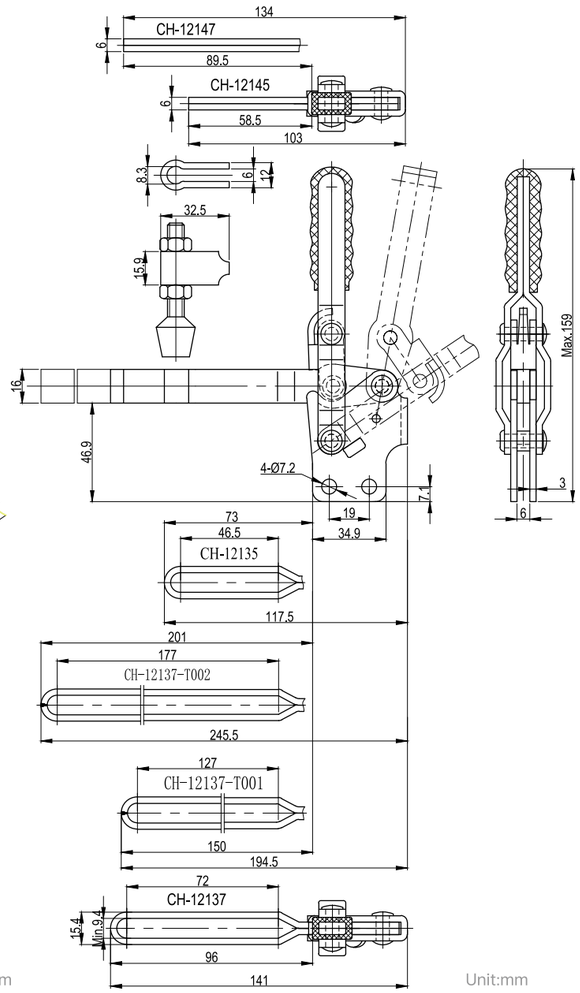

● 短實心壓把 SHORT SOLID-BAR ● 長實心壓把 LONG SOLID-BAR
● 法蘭座FLANGED BASE ● 直底座STRAIGHT BASE ● 短U型壓把SHORT U-BAR
● T型手柄T-HANDLE ● 直手柄STRAIGHT HANDLE

材質：低碳鋼。 Material: Steel.

型號 MODEL	夾持力 HOLDING CAPACITY(kgf)	自重 WEIGHT (g)	壓頭螺絲型號 SPINDLE SUPPLIED	壓把開啟角度 BAR OPENS	手柄開啟角度 HANDLE OPENS
CH-12141	227	355	CH-FC-56212	100°	60°
CH-12142	227	355	CH-FC-56212	100°	60°
CH-12143	227	375	CH-FC-56212	100°	60°
CH-12145	227	340	CH-FC-56212	100°	60°
CH-12146	227	355	CH-FC-56212	100°	60°
CH-12147	227	355	CH-FC-56212	100°	60°
CH-12148	227	375	CH-FC-56212	100°	60°
CH-12130-HB	227	401	CH-FC-56212	100°	60°
CH-12130-HBL	227	500	CH-FC-56212	100°	60°
CH-12130-SM	227	395	CH-FC-56212	100°	60°

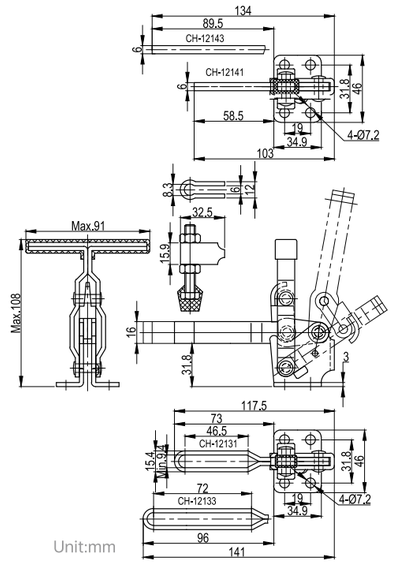

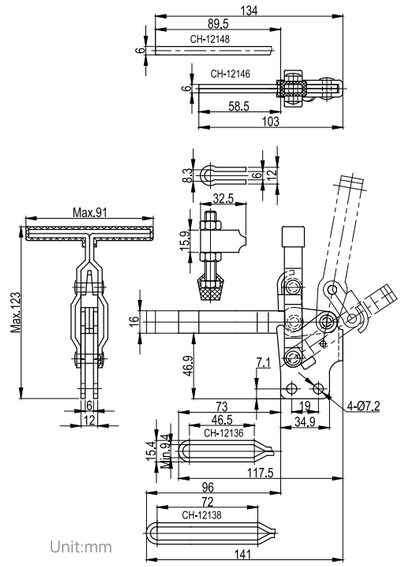

CH-12130-HB

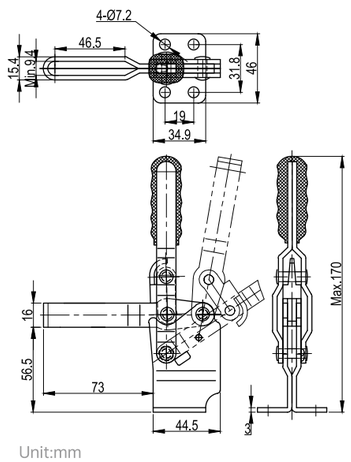

CH-12130-HBL

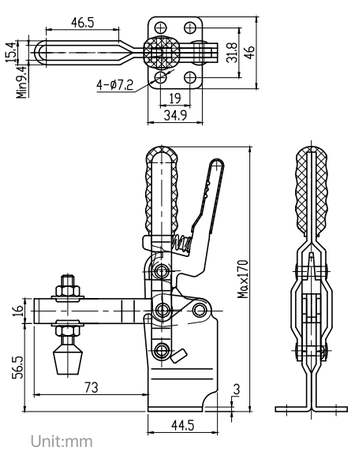

CH-12130-SM

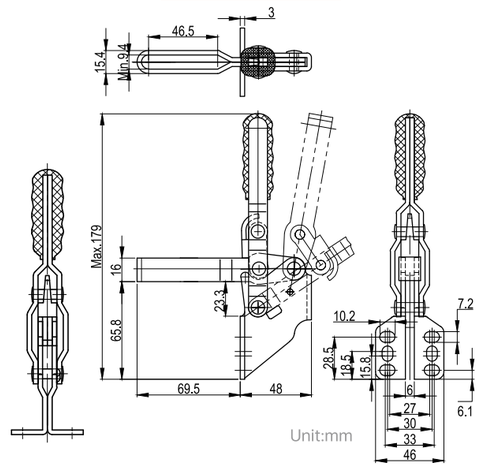

● U型壓把 U-BAR ● 實心壓把 SOLID-BAR ● 直手柄STRAIGHT HANDLE
● 法蘭座FLANGED BASE ● 直底座STRAIGHT BASE ● T型手柄T-HANDLE

材質：低碳鋼，標註 ■ 的為不鏽鋼。
Material: Steel, the product with ■ mark is available in stainless steel.

型號 MODEL	夾持力 HOLDING CAPACITY(kgf)	自重 WEIGHT (g)	壓頭螺絲型號 SPINDLE SUPPLIED	壓把開啟角度 BAR OPENS	手柄開啟角度 HANDLE OPENS
CH-12265	340	635	CH-FC-38312	105°	58°
CH-12270	340	635	CH-FC-38312	105°	58°
CH-12275	340	680	CH-FC-38312	105°	58°
CH-12280	340	680	CH-FC-38312	105°	58°
CH-12285	340	710	CH-FC-38312	105°	58°
CH-12290	340	710	CH-FC-38312	105°	58°
CH-12295	340	735	CH-FC-38312	105°	58°
CH-12300	340	735	CH-FC-38312	105°	58°
CH-12265-SS	340	635	CH-FC-38312-SS	105°	58°

該系列產品轉動關鍵部位裝有耐磨套。
This series products with hardened bushing at key pivot points.

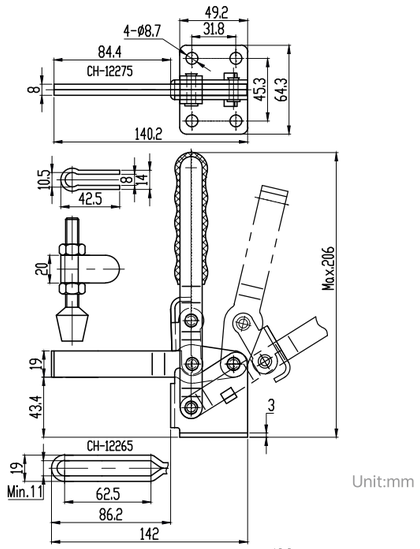

Unit:mm

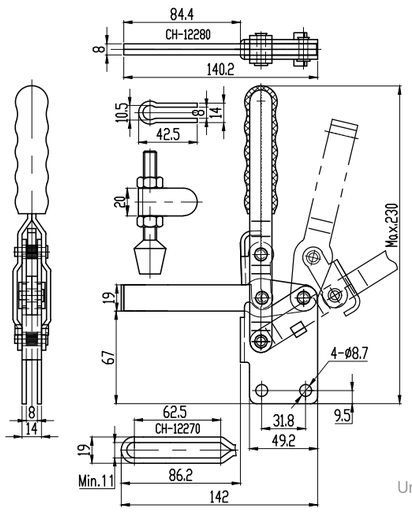

Unit:mm

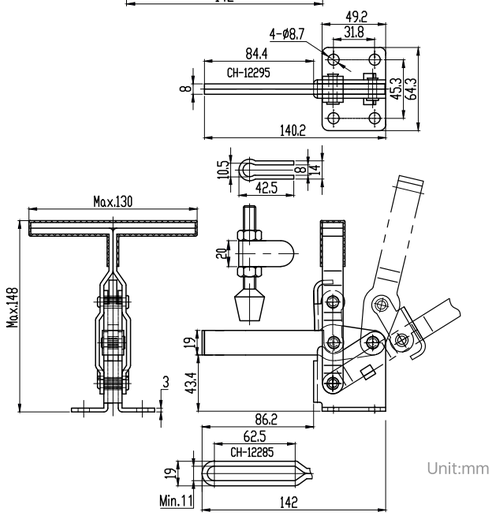

Unit:mm

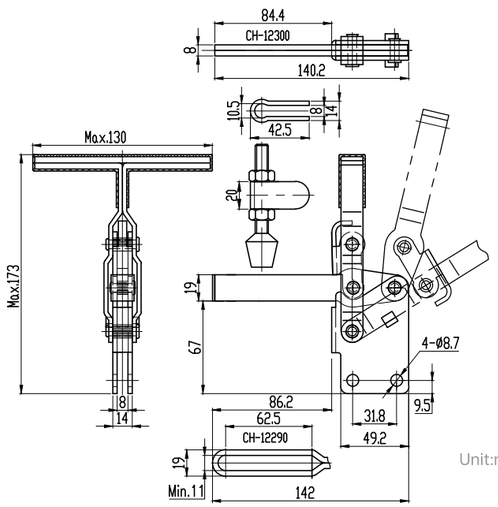

Unit:mm

CH-12305 THRU CH-12320

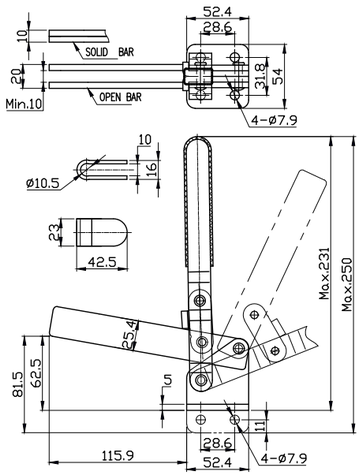

Unit:mm

● 實心壓把 SOLID-BAR ● 開口壓把 OPEN BAR
● 法蘭座 FLANGED BASE ● 直底座 STRAIGHT BASE

材質：低碳鋼。 Material: Steel.

型號 MODEL	夾持力 HOLDING CAPACITY(kgf)	自重 WEIGHT (g)	壓頭螺絲型號 SPINDLE SUPPLIED	壓把開啟角度 BAR OPENS	手柄開啟角度 HANDLE OPENS
CH-12305	364	990	CH-FC-38312	100°	65°
CH-12310	364	990	CH-FC-38312	100°	65°
CH-12315	364	990	CH-FC-38312	100°	65°
CH-12320	364	990	CH-FC-38312	100°	65°

● U型壓把 U-BAR ● 實心壓把 SOLID-BAR
● 法蘭座 FLANGED BASE ● 直底座 STRAIGHT BASE

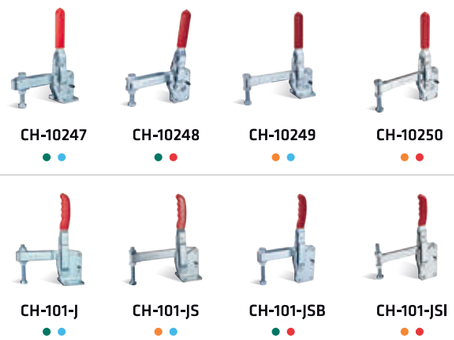

材質：低碳鋼。 Material: Steel.

型號 MODEL	夾持力 HOLDING CAPACITY(kgf)	自重 WEIGHT (g)	壓頭螺絲型號 SPINDLE SUPPLIED	壓把開啟角度 BAR OPENS	手柄開啟角度 HANDLE OPENS
CH-10247	450	1250	CH-SA-12300	100°-115°	62°-68°
CH-10248	450	1250	CH-SA-12300	100°-115°	62°-68°
CH-10249	450	1250	CH-SA-12300	100°-115°	62°-68°
CH-10250	450	1250	CH-SA-12300	100°-115°	62°-68°
CH-101-J	550	2540	CH-SA-58500	100°-140°	48°-60°
CH-101-JS	550	2540	CH-SA-58500	100°-140°	48°-60°
CH-101-JSB	550	2540	CH-SA-58500	100°-140°	48°-60°
CH-101-JSI	550	2540	CH-SA-58500	100°-140°	48°-60°

該系列產品轉動關鍵部位裝有耐磨套。
This series products with hardened bushing at key pivot points.

CH-10247 THRU CH-10250

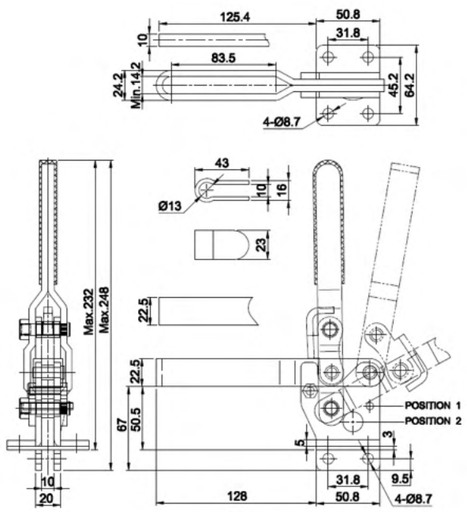

CH-101-J THRU CH-101-JSI

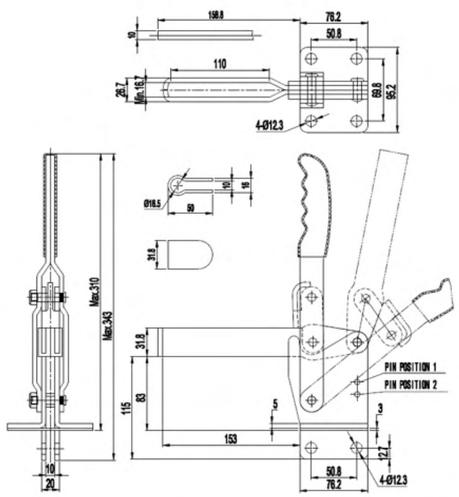

● 固定式壓把 FIXED SPINDLE ● U型壓把 U-BAR
● 法蘭座 FLANGED BASE ● 直底座 STRAIGHT BASE

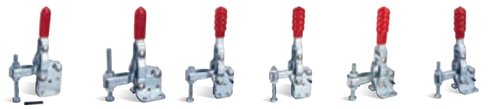

CH-10751-B ●● CH-10752-B ●● CH-11501-B ●● CH-11501-C ●● CH-11502-B ●● CH-11502-C ●●

CH-12501-B ●● CH-12501-C ●● CH-12502-B ●● CH-12502-C ●● CH-13501-B ●● CH-13502-B ●●

材質：低碳鋼。 Material: Steel.

型號 MODEL	夾持力 HOLDING CAPACITY(kgf)	自重 WEIGHT (g)	壓頭螺絲型號 SPINDLE SUPPLIED	壓把開啟角度 BAR OPENS	手柄開啟角度 HANDLE OPENS
CH-10751-B	75	50	CH-SA-055008	130°-195°	90°-125°
CH-10752-B	75	50	CH-SA-055008	130°-195°	90°-125°
CH-11501-B	150	230	CH-SA-065010	95°-185°	75°-110°
CH-11501-C	150	230	CH-SA-065010	95°-185°	75°-110°
CH-11502-B	150	230	CH-SA-065010	95°-185°	75°-110°
CH-11502-C	150	230	CH-SA-065010	95°-185°	75°-110°
CH-12501-B	250	418	CH-SA-085012	90°-150°	70°-100°
CH-12501-C	250	418	CH-SA-085012	90°-150°	70°-100°
CH-12502-B	250	418	CH-SA-085012	90°-150°	70°-100°
CH-12502-C	250	418	CH-SA-085012	90°-150°	70°-100°
CH-13501-B	350	800	CH-SA-108015	90°-180°	70°-100°
CH-13502-B	350	800	CH-SA-108015	90°-180°	70°-100°

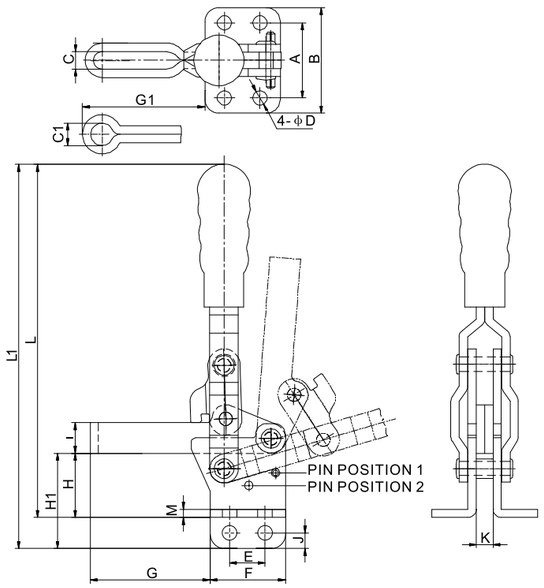

Unit:mm

型號 MODEL	A	B	C Min.	C1	ΦD	E	F	G	G1	H	H1	I	J	K	L Max.	L1 Max.	M
CH-10751-B	-	-	5.2	-	4.4	16	26	31.4	-	-	27	9	5	4	-	102	2
CH-10752-B	24	34	5.2	-	4.4	16	26	31.4	-	15	-	9	-	4	90	-	2
CH-11501-B	-	-	6.2	-	5.1	12.7	27	43	-	-	33.5	11	5.4	6	-	137	3
CH-11501-C	-	-	-	6.5	5.1	12.7	27	-	33	-	33.5	11	5.4	6	-	137	3
CH-11502-B	26.8	37.8	6.2	-	5.1	12.7	27	43	-	22.3	-	11	5.4	6	125	-	3
CH-11502-C	26.8	37.8	-	6.5	5.1	12.7	27	-	33	22.3	-	11	5.4	6	125	-	3
CH-12501-B	-	-	9.4	-	7.1	19	35	75	-	-	46	17.5	7	6	-	195	3
CH-12501-C	-	-	-	8.4	7.1	19	35	-	53	-	46	17.5	7	6	-	195	3
CH-12502-B	32	47	9.4	-	7.1	19	35	75	-	31	-	17.5	7	6	179	-	3
CH-12502-C	32	47	-	8.4	7.1	19	35	-	53	32	-	17.5	7	6	179	-	3
CH-13501-B	-	-	10.6	-	8.3	32	50	94.5	-	-	63	22	10	8	-	242	4
CH-13502-B	45	64	10.6	-	8.3	32	50	94.5	-	43	-	22	9.5	8	222	-	4

● 法蘭座FLANGED BASE ● 直底座STRAIGHT BASE

CH-13009 ● CH-14009 ●

材質：低碳鋼。 Material: Steel.

型號 MODEL	夾持力 HOLDING CAPACITY(kgf)	自重 WEIGHT (g)	壓頭螺絲型號 SPINDLE SUPPLIED	壓把開啟角度 BAR OPENS	手柄開啟角度 HANDLE OPENS
CH-13009	30	40	CH-FC-044207	80°	88°
CH-14009	30	40	CH-FC-044207	80°	88°

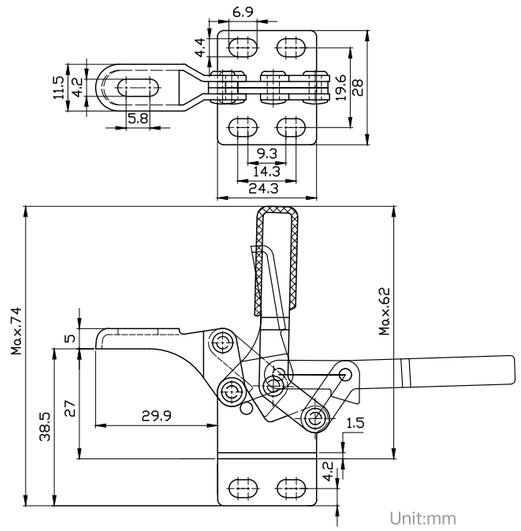

Unit:mm

CH-101-B CH-102-B ■ CH-102-BSS

材質：低碳鋼，標註 ■ 的為不鏽鋼。
Material: Steel, the product with ■ mark is available in stainless steel.

型號 MODEL	夾持力 HOLDING CAPACITY(kgf)	自重 WEIGHT (g)	壓頭螺絲型號 SPINDLE SUPPLIED	壓把開啟角度 BAR OPENS	手柄開啟角度 HANDLE OPENS
CH-101-B	100	120	CH-FC-14134	90°	65°
CH-102-B	100	115	CH-FC-14134	90°	65°
CH-102-BSS	100	115	CH-FC-14134-SS	90°	65°

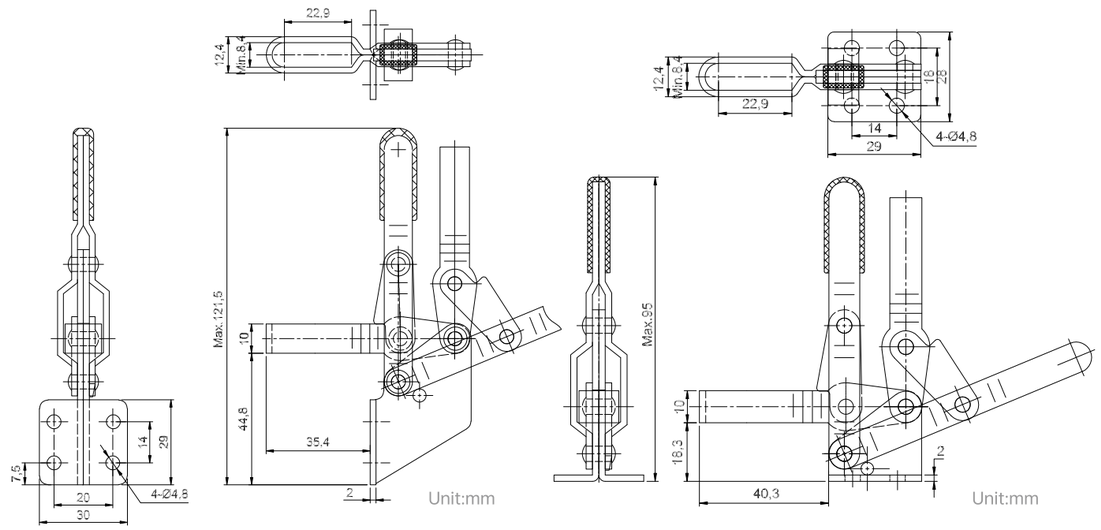

Unit:mm Unit:mm

● U型壓把 U-BAR ● 長U型壓把 LONG U-BAR ● 法蘭座FLANGED BASE
● 長手柄 LONG HANDLE ● 直手柄STRAIGHT HANDLE ● 直底座STRAIGHT BASE

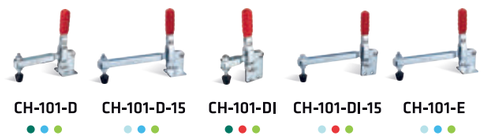

CH-101-D ●●● CH-101-D-15 ●●● CH-101-DI ●●● CH-101-DI-15 ●●● CH-101-E ●●●

CH-101-E-20 ●●● CH-101-EI ●●● CH-101-EI-20 ●●● CH-101-DL ●●●

材質：低碳鋼。 Material: Steel.

型號 MODEL	夾持力 HOLDING CAPACITY(kgf)	自重 WEIGHT (g)	壓頭螺絲型號 SPINDLE SUPPLIED	壓把開啟角度 BAR OPENS	手柄開啟角度 HANDLE OPENS
CH-101-D	180	330	CH-FC-56212	100°	60°
CH-101-D-15	180	412	CH-FC-56212	100°	60°
CH-101-DI	180	330	CH-FC-56212	100°	60°
CH-101-DI-15	180	412	CH-FC-56212	100°	60°
CH-101-E	180	380	CH-FC-56212	100°	60°
CH-101-E-20	180	440	CH-FC-56212	100°	60°
CH-101-EI	180	380	CH-FC-56212	100°	60°
CH-101-EI-20	180	440	CH-FC-56212	100°	60°
CH-101-DL	180	350	CH-FC-56212	100°	60°

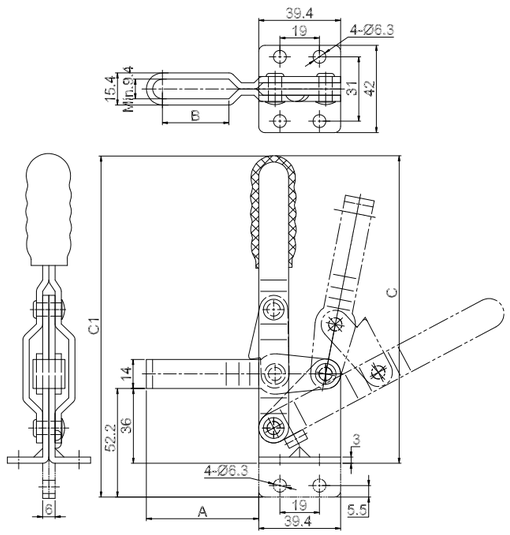

Unit:mm

型號 MODEL	A	B	C Max.	C1 Max.
CH-101-D	54	32	148	-
CH-101-D-15	154.6	131	148	-
CH-101-DI	54	32	-	164
CH-101-DI-15	154.6	131	-	164
CH-101-E	105.5	82	148	-
CH-101-E-20	205	182	148	-
CH-101-EI	105.5	82	-	164
CH-101-EI-20	205	182	-	164
CH-101-DL	54	32	187	-

● 上彎U型壓把 CURVE UP U-BAR ● 下彎U型壓把 CURVE DOWN U-BAR
● 法蘭座 FLANGED BASE ● 直底座 STRAIGHT BASE ● 直手柄 STRAIGHT HANDLE

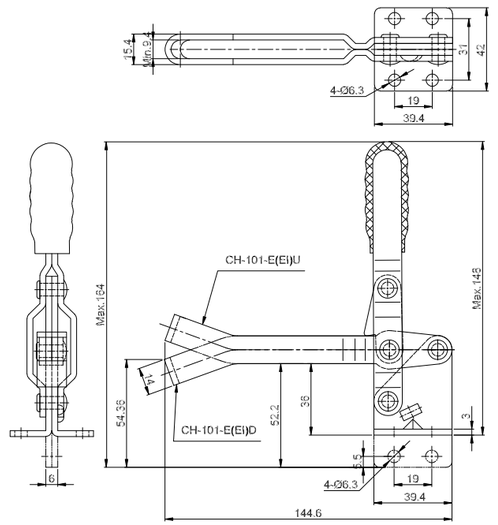

Unit:mm

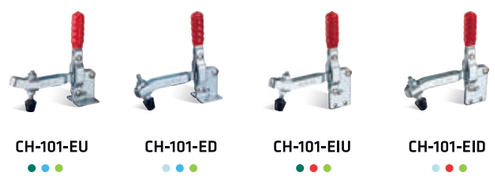

CH-101-EU ●●● CH-101-ED ●●● CH-101-EIU ●●● CH-101-EID ●●●

材質：低碳鋼。 Material: Steel.

型號 MODEL	夾持力 HOLDING CAPACITY(kgf)	自重 WEIGHT (g)	壓頭螺絲型號 SPINDLE SUPPLIED	壓把開啟角度 BAR OPENS	手柄開啟角度 HANDLE OPENS
CH-101-EU	150	374	CH-FC-56212	100°	60°
CH-101-ED	150	374	CH-FC-56212	100°	60°
CH-101-EIU	150	374	CH-FC-56212	100°	60°
CH-101-EID	150	374	CH-FC-56212	100°	60°

● 法蘭座FLANGED BASE ● 直底座STRAIGHT BASE

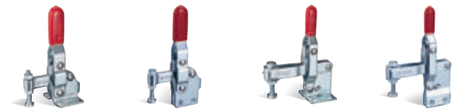

CH-11401 ● CH-12401 ● CH-11421 ● ■ CH-11421-SS ● CH-12421 ●

CH-11412 ● CH-12412 ● CH-14412 ● CH-13412 ●

材質：低碳鋼，標註 ■ 的為不鏽鋼。
Material: Steel, the product with ■ mark is available in stainless steel.

型號 MODEL	夾持力 HOLDING CAPACITY(kgf)	自重 WEIGHT (g)	壓頭螺絲型號 SPINDLE SUPPLIED	壓把開啟角度 BAR OPENS	手柄開啟角度 HANDLE OPENS
CH-11401	100	200	CH-SA-064010	118°	70°
CH-12401	100	200	CH-SA-064010	118°	70°
CH-11421	200	370	CH-SA-085012	94°	54°
CH-12421	200	370	CH-SA-085012	94°	54°
CH-11412	200	420	CH-SA-085012	110°	64°
CH-12412	200	420	CH-SA-085012	110°	64°
CH-14412	300	1340	CH-SA-109015	115°	64°
CH-13412	300	1340	CH-SA-109015	115°	64°
CH-11421-SS	200	370	CH-SA-08501-SS	94°	54°

CH-11401 AND CH-12401

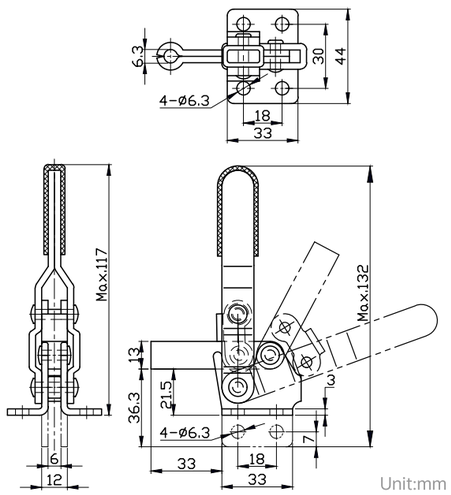

Unit:mm

CH-11421 AND CH-12421

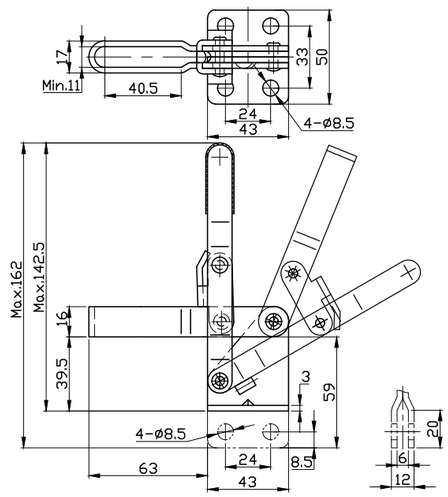

Unit:mm

CH-11412 AND CH-12412

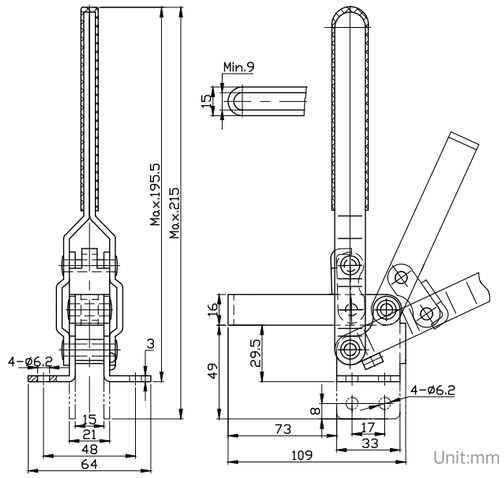

Unit:mm

CH-14412 AND CH-13412

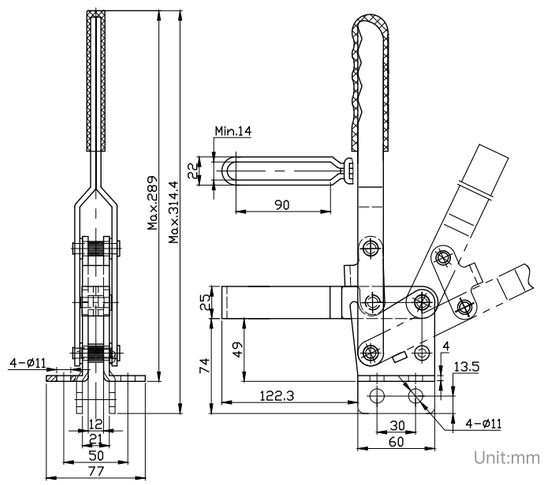

Unit:mm

● 長壓把 LONG BAR ● 短壓把 SHORT BAR
● 法蘭座 FLANGED BASE ● 高法蘭座 HIGH FLANGED BASE

CH-10444

CH-10448-Z

CH-10448-ZH

材質：低碳鋼。 Material: Steel.

型號 MODEL	夾持力 HOLDING CAPACITY(kgf)	自重 WEIGHT (g)	壓頭螺絲型號 SPINDLE SUPPLIED	壓把開啟角度 BAR OPENS	手柄開啟角度 HANDLE OPENS
CH-10444	400	870	CH-SA-105015	129°	75.5°
CH-10448-Z	400	840	CH-SA-105015	129°	75.5°
CH-10448-ZH	400	1000	CH-SA-105015	129°	75.5°

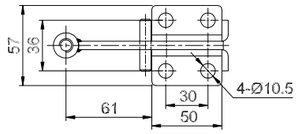

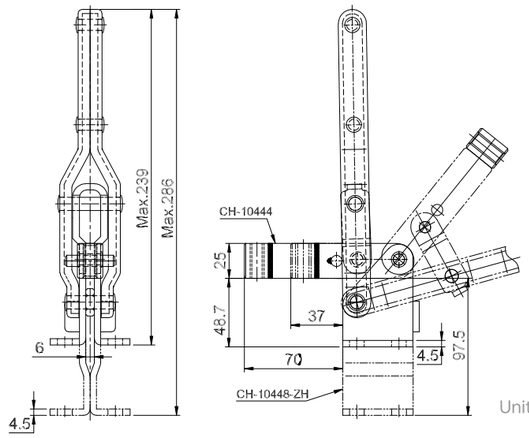

Unit:mm

CH-10648

材質：低碳鋼。 Material: Steel.

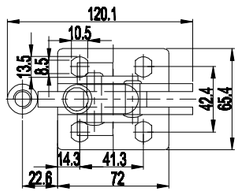

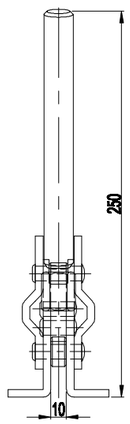

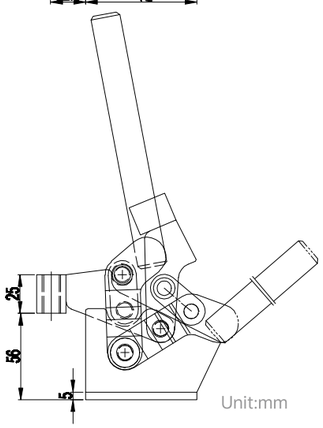

Unit:mm

型號 MODEL	夾持力 HOLDING CAPACITY(kgf)	自重 WEIGHT (g)	壓頭螺絲型號 SPINDLE SUPPLIED	壓把開啟角度 BAR OPENS	手柄開啟角度 HANDLE OPENS
CH-10648	450	1310	CH-SA-125017	67.5°	60°

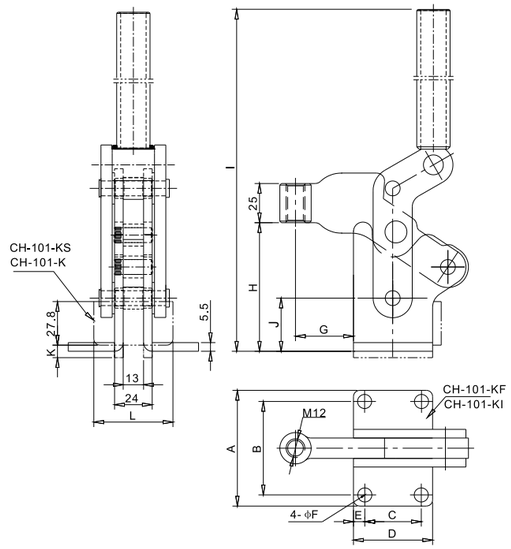

CH-101-K CH-101-KI CH-101-KF CH-101-KS

材質：低碳鋼。 Material: Steel.

型號 MODEL	夾持力 HOLDING CAPACITY(kgf)	自重 WEIGHT (g)	壓頭螺絲型號 SPINDLE SUPPLIED
CH-101-K	500	1730	CH-SA-127517
CH-101-KI	500	1680	CH-SA-127517
CH-101-KF	500	1730	CH-SA-127517
CH-101-KS	500	1730	CH-SA-127517

Unit:mm

型號 MODEL	A	B	C	D	E	ΦF	G	H	I Max.	J	K	L
CH-101-K	-	-	-	50.5	-	-	37	83	291	40.3	0	50.5
CH-101-KI	68	44	44	68	14.5	9	28.6	64.5	272	22	-	-
CH-101-KF	84	69.6	36	50.5	7.25	9	37	83	288	38	-	-
CH-101-KS	-	-	-	80.5	-	-	37	83	288	38	8	50.5

CH-101-EL CH-101-H

材質：低碳鋼。 Material: Steel.

型號 MODEL	夾持力 HOLDING CAPACITY(kgf)	自重 WEIGHT (g)	壓頭螺絲型號 SPINDLE SUPPLIED	壓把開啟角度 BAR OPENS	手柄開啟角度 HANDLE OPENS
CH-101-EL	360	860	CH-FC-38312	90°	60°
CH-101-H	450	1250	CH-SA-12300	101°	63°

CH-101-EL

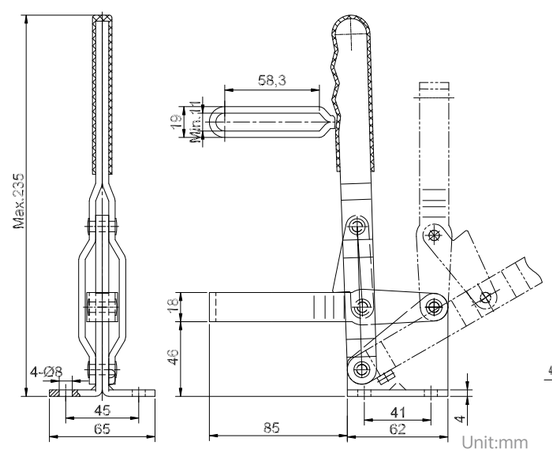

Unit:mm

CH-101-H

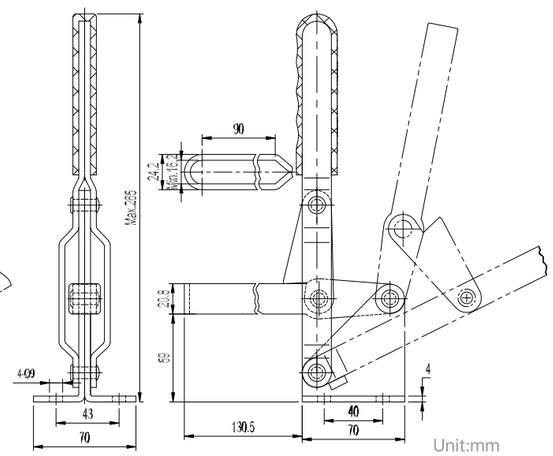

Unit:mm

● 實心壓把SOLID BAR ● U型壓把U-BAR ● 法蘭座FLANGED BASE
● 左法蘭 LEFT HAND FLANGED BASE ● 直底座STRAIGHT BASE
● 右法蘭 RIGHT HAND FLANGED BASE

材質：低碳鋼，標註 ■ 的為不鏽鋼。
Material: Steel, the product with ■ mark is available in stainless steel.

型號 MODEL	夾持力 HOLDING CAPACITY(kgf)	自重 WEIGHT (g)	壓頭螺絲型號 SPINDLE SUPPLIED	壓把開啟角度 BAR OPENS	手柄開啟角度 HANDLE OPENS	T (mm)
CH-201-A	27	30	CH-SA-08034(NYLON)	90°	80°	1.5
CH-201-AI	27	30	CH-SA-08034(NYLON)	90°	80°	1.5
CH-201-AL	27	30	CH-SA-08034(NYLON)	90°	80°	3
CH-201-AR	27	30	CH-SA-08034(NYLON)	90°	80°	3
CH-201	27	35	CH-SA-08034(NYLON)	90°	80°	1.5
CH-201-I	27	35	CH-SA-08034(NYLON)	90°	80°	1.5
CH-201-L	27	35	CH-SA-08034(NYLON)	90°	80°	3
CH-201-R	27	35	CH-SA-08034(NYLON)	90°	80°	3
CH-201-ASS	27	30	CH-SA-08034-SS	90°	80°	1.5
CH-201-SS	27	35	CH-SA-08034-SS	90°	80°	1.5

CH-201 THRU CH-201-R

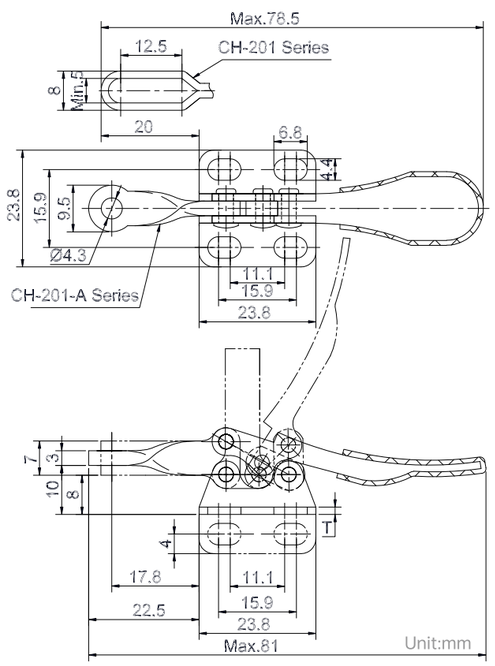

CH-22100 THRU CH-22115

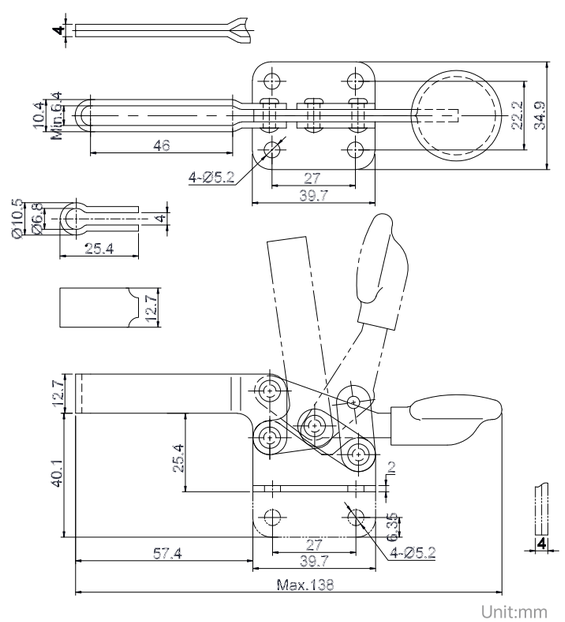

● 實心壓把SOLID BAR ● U型壓把U-BAR
● 法蘭座FLANGED BASE ● 直底座STRAIGHT BASE

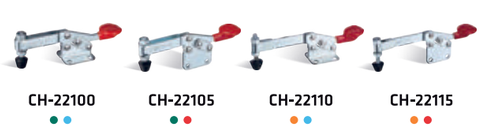

材質：低碳鋼。 Material: Steel.

型號 MODEL	夾持力 HOLDING CAPACITY(kgf)	自重 WEIGHT (g)	壓頭螺絲型號 SPINDLE SUPPLIED	壓把開啟角度 BAR OPENS	手柄開啟角度 HANDLE OPENS
CH-22100	68	110	CH-FC-14134	81°	68°
CH-22105	68	110	CH-FC-14134	81°	68°
CH-22110	68	110	CH-FC-14134	81°	68°
CH-22115	68	110	CH-FC-14134	81°	68°

● 實心壓把 SOLID BAR ● U型壓把 U-BAR
● 法蘭座 FLANGED BASE ● 直底座 STRAIGHT BASE

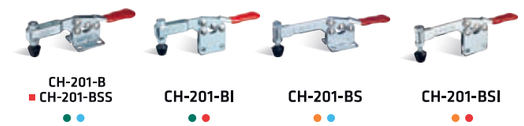

材質：低碳鋼，標註 ■ 的為不鏽鋼。
Material: Steel, the product with ■ mark is available in stainless steel.

型號 MODEL	夾持力 HOLDING CAPACITY(kgf)	自重 WEIGHT (g)	壓頭螺絲型號 SPINDLE SUPPLIED	壓把開啟角度 BAR OPENS	手柄開啟角度 HANDLE OPENS
CH-201-B	90	130	CH-FC-14134	85°	60°
CH-201-BI	90	130	CH-FC-14134	85°	60°
CH-201-BS	90	130	CH-FC-14134	85°	60°
CH-201-BSI	90	130	CH-FC-14134	85°	60°
CH-201-BSS	90	130	CH-FC-14134-SS	85°	60°

CH-201-B THRU CH-201-BSI

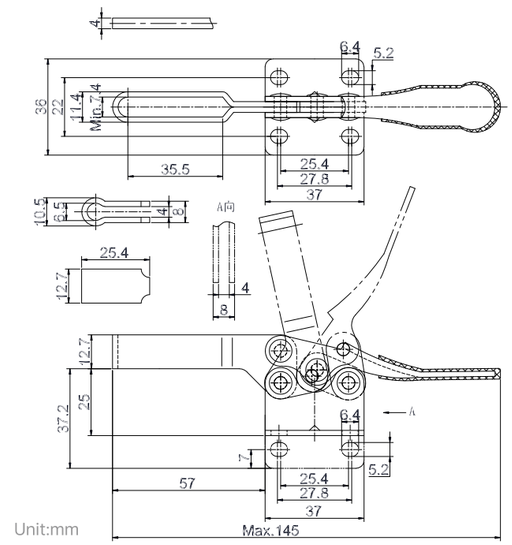

材質：低碳鋼。 Material: Steel.

型號 MODEL	夾持力 HOLDING CAPACITY(kgf)	自重 WEIGHT (g)	壓頭螺絲型號 SPINDLE SUPPLIED	壓把開啟角度 BAR OPENS	手柄開啟角度 HANDLE OPENS
CH-201-BHB	90	146	CH-FC-14134	85°	60°
CH-201-BSM	90	163	CH-FC-14134	85°	60°

CH-201-BHB

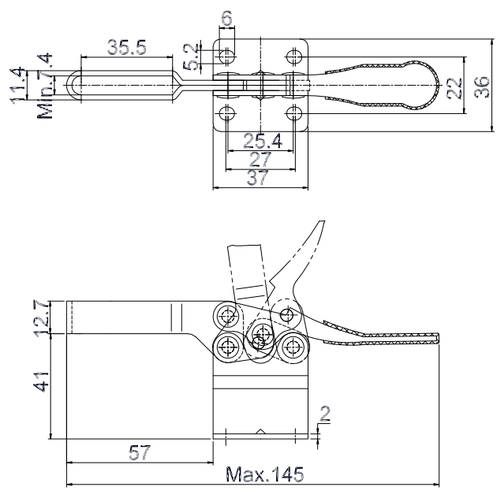

CH-201-BSM

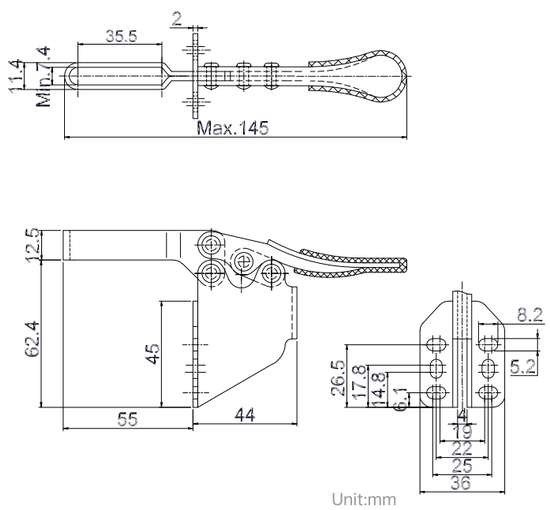

● U型壓把 U-BAR ● 法蘭座 FLANGED BASE ● 直底座 STRAIGHT BASE

CH-225-D
■ CH-225-DSS

CH-225-DI

型號 MODEL	夾持力 HOLDING CAPACITY(kgf)	自重 WEIGHT (g)	壓頭螺絲型號 SPINDLE SUPPLIED	壓把開啟角度 BAR OPENS	手柄開啟角度 HANDLE OPENS
CH-225-D	227	265	CH-FC-56212	90°	65°
CH-225-DI	227	265	CH-FC-56212	90°	65°
CH-225-DSS	227	265	CH-FC-56212-SS	90°	65°

材質：低碳鋼，標註 ■ 的為不鏽鋼。
Material: Steel, the product with ■ mark is available in stainless steel.

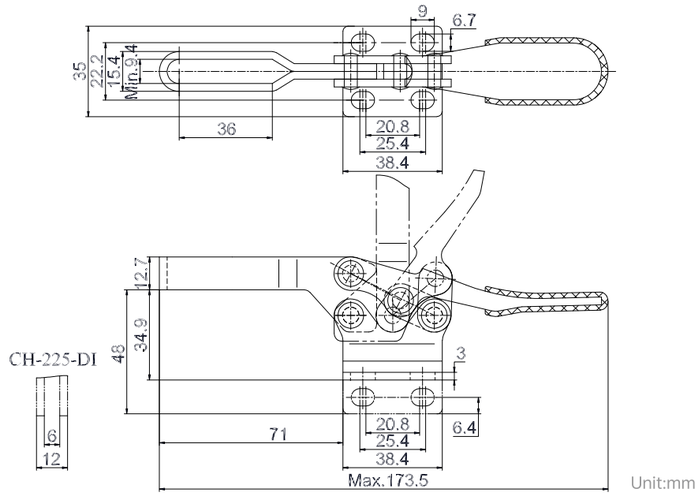

Unit:mm

CH-225-DHB
■ CH-225-DHBSS

CH-225-DSM

型號 MODEL	夾持力 HOLDING CAPACITY(kgf)	自重 WEIGHT (g)	壓頭螺絲型號 SPINDLE SUPPLIED	壓把開啟角度 BAR OPENS	手柄開啟角度 HANDLE OPENS
CH-225-DHB	227	286	CH-FC-56212	90°	65°
CH-225-DSM	227	315	CH-FC-56212	90°	65°
CH-225-DHBSS	227	286	CH-FC-56212-SS	90°	65°

材質：低碳鋼，標註 ■ 的為不鏽鋼。
Material: Steel, the product with ■ mark is available in stainless steel.

CH-225-DHB

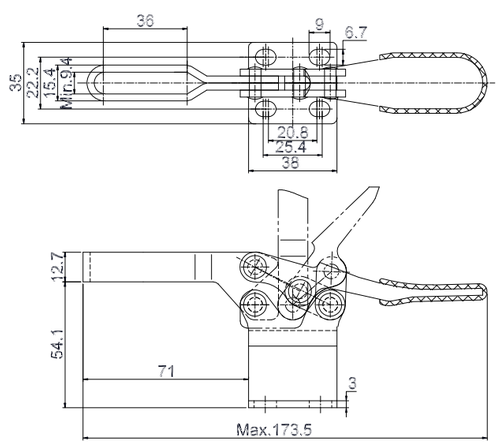

Unit:mm

CH-225-DSM

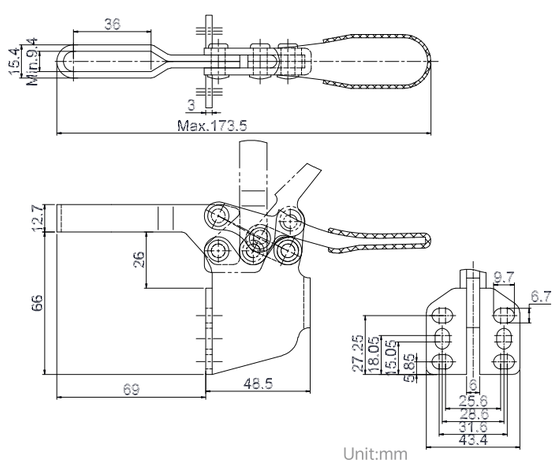

Unit:mm

CH-20820

材質：低碳鋼。 Material: Steel.

型號 MODEL	夾持力 HOLDING CAPACITY(kgf)	自重 WEIGHT (g)	壓頭螺絲型號 SPINDLE SUPPLIED	壓把開啟角度 BAR OPENS	手柄開啟角度 HANDLE OPENS
CH-20820	100	400	CH-FC-56212	185°	60°

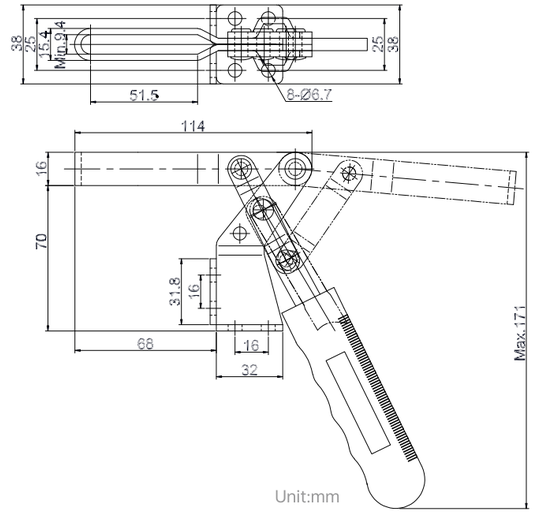

Unit:mm

● 長開口壓把LONG OPEN BAR ● 短U型壓把SHORT U-BAR ● 短實心壓把SHORT SOLID BAR
● 長實心壓把LONG SOLID BAR ● 法蘭座FLANGED BASE ● 直底座STRAIGHT BASE

CH-22165

CH-22170

CH-22175

CH-22180

CH-22185

CH-22190

CH-22195

CH-22200

材質：低碳鋼。 Material: Steel.

型號 MODEL	夾持力 HOLDING CAPACITY(kgf)	自重 WEIGHT (g)	壓頭螺絲型號 SPINDLE SUPPLIED	壓把開啟角度 BAR OPENS	手柄開啟角度 HANDLE OPENS
CH-22165	250	285	CH-FC-56212	96°	88°
CH-22170	250	285	CH-FC-56212	96°	88°
CH-22175	250	300	CH-FC-56212	96°	88°
CH-22180	250	300	CH-FC-56212	96°	88°
CH-22185	250	360	CH-FC-56212	96°	88°
CH-22190	250	360	CH-FC-56212	96°	88°
CH-22195	250	365	CH-FC-56212	96°	88°
CH-22200	250	365	CH-FC-56212	96°	88°

SHORT U-BAR CH-22165 THRU CH-22185

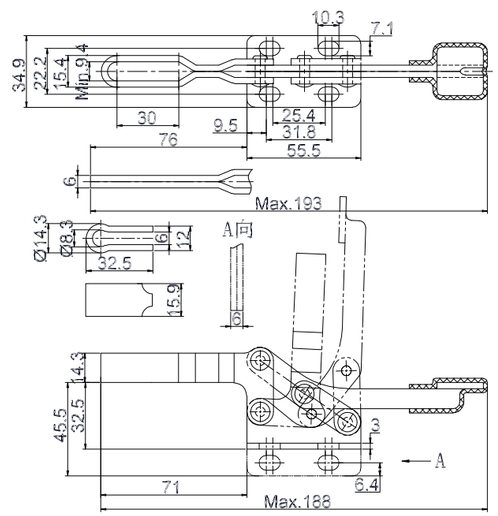

Unit:mm

LONG OPEN BAR CH-22185 THRU CH-22200

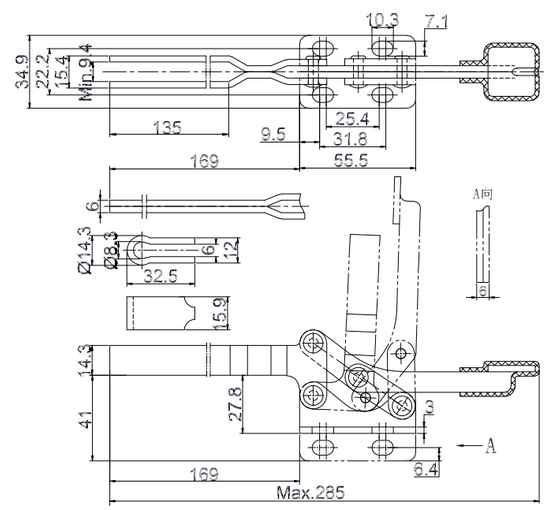

Unit:mm

● 開口壓把STANDARD OPEN BAR ● 標準實心壓把STANDARD SOLID BAR
● 法蘭座FLANGED BASE ● 直底座STRAIGHT BASE

CH-22235 CH-22240 CH-22245 CH-22250

材質：低碳鋼。 Material: Steel.

型號 MODEL	夾持力 HOLDING CAPACITY(kgf)	自重 WEIGHT (g)	壓頭螺絲型號 SPINDLE SUPPLIED	壓把開啟角度 BAR OPENS	手柄開啟角度 HANDLE OPENS
CH-22235	273	640	CH-FC-56212	100°	94°
CH-22240	273	640	CH-FC-56212	100°	94°
CH-22245	273	655	CH-FC-56212	100°	94°
CH-22250	273	655	CH-FC-56212	100°	94°

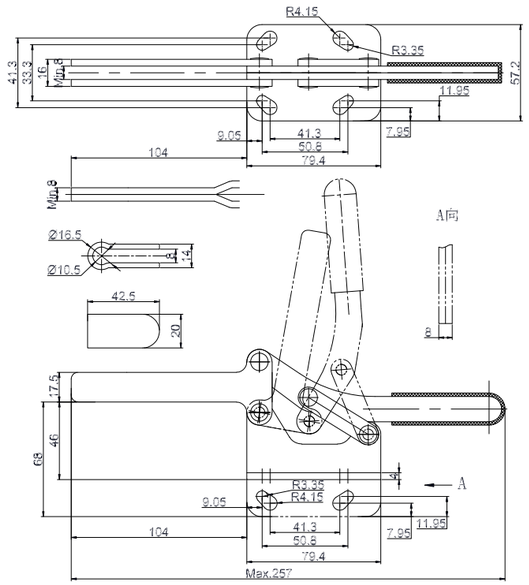

Unit:mm

CH-20235
■ CH-20235-SS

CH-20236

型號 MODEL	夾持力 HOLDING CAPACITY(kgf)	自重 WEIGHT (g)	壓頭螺絲型號 SPINDLE SUPPLIED	壓把開啟角度 BAR OPENS	手柄開啟角度 HANDLE OPENS
CH-20235	340	700	CH-FC-38312	85°	50°
CH-20236	340	700	CH-FC-38312	85°	50°
CH-20235-SS	340	700	CH-FC-38312-SS	85°	50°

材質：低碳鋼，標註 ■ 的為不鏽鋼。
Material: Steel, the product with ■ mark is available in stainless steel.

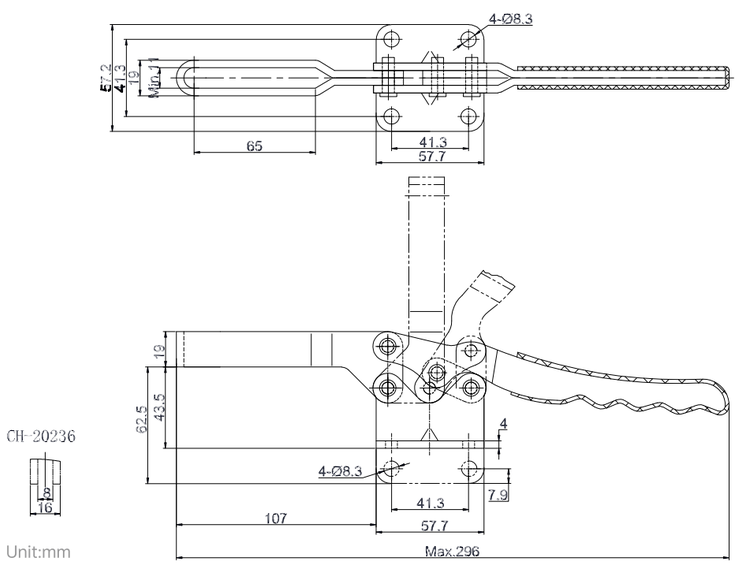

Unit:mm

CH-20752-B THRU CH-24502-B

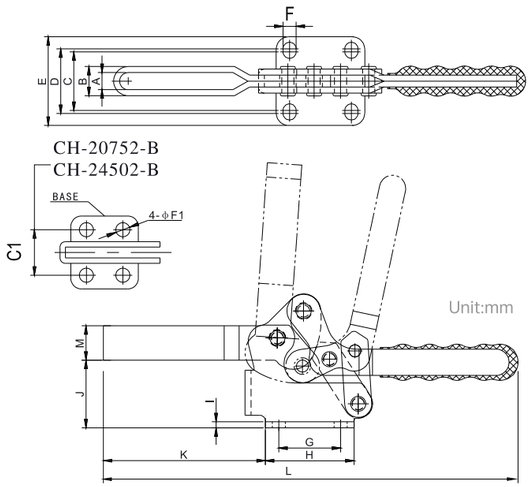

Unit:mm

CH-20752-B
■ CH-20752-BSS
CH-21502-B
■ CH-21502-BSS
CH-22502-B
CH-23502-B
CH-24502-B

材質：低碳鋼，標註 ■ 的為不鏽鋼。
Material: Steel, the product with ■ mark is available in stainless steel.

型號 MODEL	夾持力 HOLDING CAPACITY(kgf)	自重 WEIGHT (g)	壓頭螺絲型號 SPINDLE SUPPLIED	壓把開啟角度 BAR OPENS	手柄開啟角度 HANDLE OPENS
CH-20752-B	75	88	CH-SA-053008	94°	76°
CH-21502-B	150	220	CH-SA-064010	94°	76°
CH-22502-B	250	430	CH-SA-085012	94°	76°
CH-23502-B	350	872	CH-SA-107515	94°	76°
CH-24502-B	450	1400	CH-SA-121017	94°	76°
CH-20752-BSS	75	88	CH-SA-053008-SS	94°	76°
CH-21502-BSS	150	220	CH-SA-064010-SS	94°	76°

Unit:mm

型號 MODEL	A Min.	B	C	C1	D	E	F	F1	G	H	I	J	K	L Max.	M
CH-20752-B	5.8	9.8	-	16.8	-	27	-	5.5	13.5	25	2	19	38.4	120	9.5
CH-21502-B	6.2	11.2	22	-	28	40	5.5	-	26	38	2.5	25.5	62.5	174	14
CH-22502-B	9	15	26	-	31	47	6.6	-	26	42	3	34	78.2	222	17.5
CH-23502-B	11	19	39	-	43	59	8.7	-	41.2	59	4	45	107	275	23
CH-24502-B	13.2	23.2	-	41.3	-	67	-	8.7	41.2	66	5	59	128.7	307	26
CH-20752-BSS	5.8	9.8	-	16.8	-	27	-	5.5	13.5	25	2	19	38.4	120	9.5
CH-21502-BSS	6.2	11.2	22	-	28	40	5.5	-	26	38	2.5	25.5	62.5	174	14

CH-201-C

材質：低碳鋼。 Material: Steel.

型號 MODEL	夾持力 HOLDING CAPACITY(kgf)	自重 WEIGHT (g)	壓頭螺絲型號 SPINDLE SUPPLIED	壓把開啟角度 BAR OPENS	手柄開啟角度 HANDLE OPENS
CH-201-C	100	147	CH-FC-14134	79°	92°

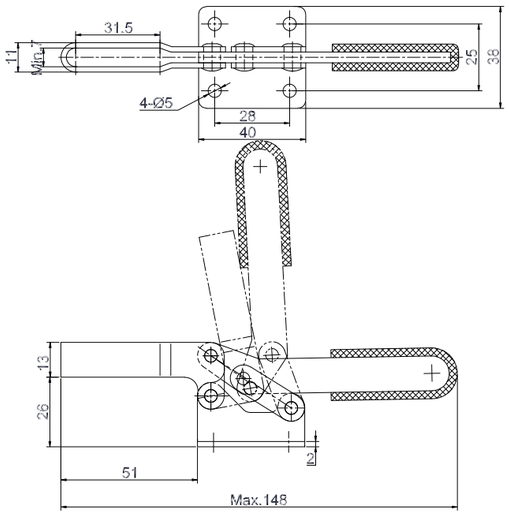

Unit:mm

● U型壓把U-BAR ● 長U型壓把LONG U-BAR ● 法蘭座FLANGED BASE ● 側面法蘭安裝SIDE MOUNTED ● 長手柄LONG HANDLE

材質：低碳鋼，標註 ■ 的為不鏽鋼。
Material: Steel, the product with ■ mark is available in stainless steel.

CH-203-F
■ CH-203-FSS
● ●

CH-203-FL
● ●

CH-202-F
● ●

CH-202-FL
● ●

CH-203-P
● ● ●

Unit:mm

型號 MODEL	夾持力 HOLDING CAPACITY(kgf)	自重 WEIGHT (g)	壓頭螺絲型號 SPINDLE SUPPLIED	壓把開啟角度 BAR OPENS	手柄開啟角度 HANDLE OPENS	A	B	C Max.
CH-203-F	227	340	CH-FC-56212	85°	58°	57.5	34.4	196
CH-203-FL	227	380	CH-FC-56212	85°	58°	95	34.4	234
CH-202-F	227	385	CH-FC-56212	85°	58°	52	60	196
CH-202-FL	227	425	CH-FC-56212	85°	58°	89	60	234
CH-203-P	227	383	CH-FC-56212	85°	58°	57.5	39.3	227
CH-203-FSS	227	340	CH-FC-56212-SS	85°	58°	57.5	34.4	196

CH-203-F CH-203-FL CH-203-P

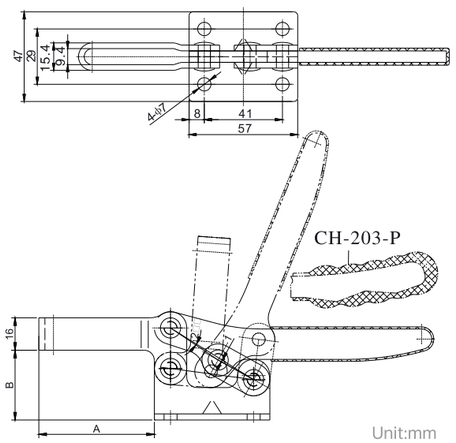

Unit:mm

CH-202-F CH-202-FL

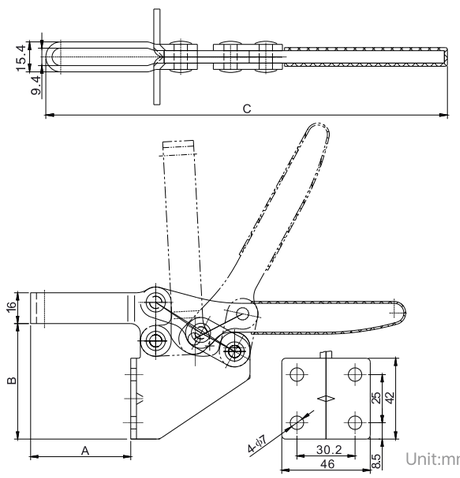

Unit:mm

● 開口壓把OPEN BAR ● 長開口壓把LONG OPEN BAR ● 鑄造底座DUCTILE IRON BASE

CH-204-G
● ●

CH-204-GL
● ●

材質：低碳鋼，底座為鑄鋼。 Material: Steel,the base is cast steel.

型號 MODEL	夾持力 HOLDING CAPACITY(kgf)	自重 WEIGHT (g)	壓頭螺絲型號 SPINDLE SUPPLIED	壓把開啟角度 BAR OPENS	手柄開啟角度 HANDLE OPENS
CH-204-G	636	1220	CH-SA-12300	91°	94°
CH-204-GL	636	1220	CH-SA-12300	91°	94°

* Heavy Duty can be mounted to any fixture using the 4 hole bolt pattern or to any T-slot table with T-slot bolt.
安裝方便，適用於螺栓、T型槽和T型螺栓安裝等。
* Supplied with bushings hardened ground pivots.
在產品轉動關鍵部位裝有耐磨套。

CH-204-G CH-204-GL

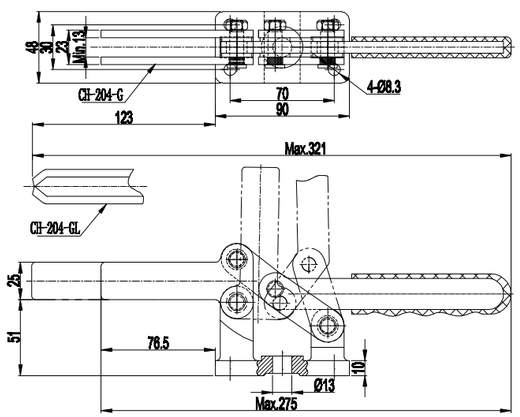

Unit:mm

● 短壓把SHORT BAR ● 長壓把LONG BAR ● 低底座LOW BASE ● 高底座HIGH BASE

CH-204-GB
● ●

CH-204-GBL
● ●

CH-204-GBLH
● ●

材質：低碳鋼。 Material: Steel.

Unit:mm

型號 MODEL	A	B Max.	C
CH-204-GB	44.5	272	80
CH-204-GBL	44.5	320	127.5
CH-204-GBLH	69.5	320	127.5

型號 MODEL	夾持力 HOLDING CAPACITY(kgf)	自重 WEIGHT (g)	壓頭螺絲型號 SPINDLE SUPPLIED	壓把開啟角度 BAR OPENS	手柄開啟角度 HANDLE OPENS
CH-204-GB	630	1180	CH-SA-12300	90°	94°
CH-204-GBL	630	1260	CH-SA-12300	90°	94°
CH-204-GBLH	630	1465	CH-SA-12300	90°	94°

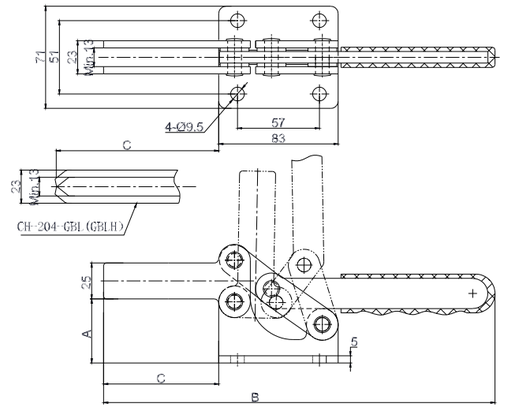

● 高壓把HIGH BAR ● 低壓把LOW BAR ● 法蘭座FLANGED BASE ● 直底座STRAIGHT BASE
● 右法蘭底座RIGHT HAND FLANGED BASE ● 左法蘭底座LEFT HAND STRAIGHT BASE

CH-22005
● ●

CH-22010
● ●

CH-22015
● ●

CH-22020
● ●

CH-22025
● ●

CH-22030
● ●

CH-22035
● ●

CH-22040
● ●

材質：低碳鋼。 Material: Steel.

型號 MODEL	夾持力 HOLDING CAPACITY(kgf)	自重 WEIGHT (g)	壓頭螺絲型號 SPINDLE SUPPLIED	壓把開啟角度 BAR OPENS	手柄開啟角度 HANDLE OPENS
CH-22005	22.7	25	CH-SA-08034(NYLON)	90°	60°
CH-22010	22.7	25	CH-SA-08034(NYLON)	90°	60°
CH-22015	22.7	25	CH-SA-08034(NYLON)	90°	60°
CH-22020	22.7	25	CH-SA-08034(NYLON)	90°	60°
CH-22025	22.7	25	CH-SA-08034(NYLON)	90°	60°
CH-22030	22.7	25	CH-SA-08034(NYLON)	90°	60°
CH-22035	22.7	25	CH-SA-08034(NYLON)	90°	60°
CH-22040	22.7	25	CH-SA-08034(NYLON)	90°	60°

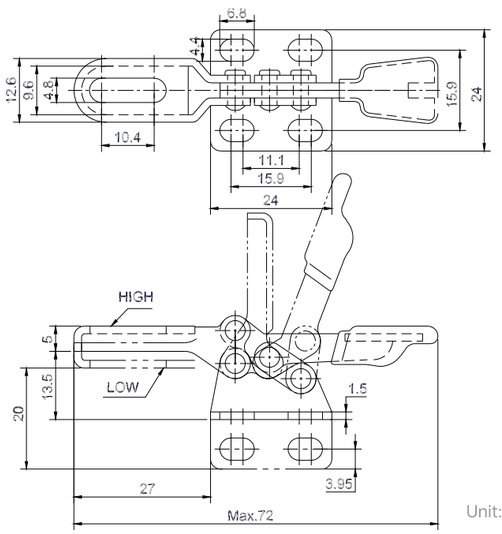

Unit:mm

CH-20400

CH-20100

CH-20300

材質：低碳鋼。 Material: Steel.

型號 MODEL	夾持力 HOLDING CAPACITY(kgf)	自重 WEIGHT (g)	壓頭螺絲型號 SPINDLE SUPPLIED	壓把開啟角度 BAR OPENS	手柄開啟角度 HANDLE OPENS
CH-20400	20	25.5	CH-SA-042507	70°	80°
CH-20100	20	35	CH-SA-042507	70°	67°
CH-20300	30	100	CH-SA-044007	72°	73°

CH-20400

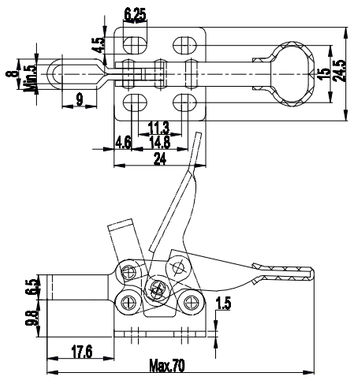

Unit:mm

CH-20100

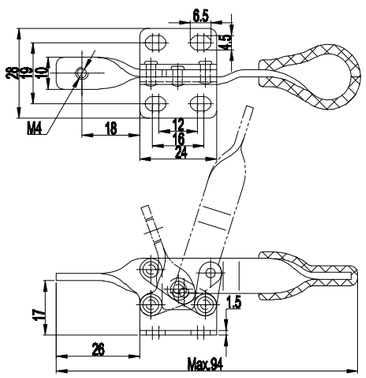

Unit:mm

CH-20300

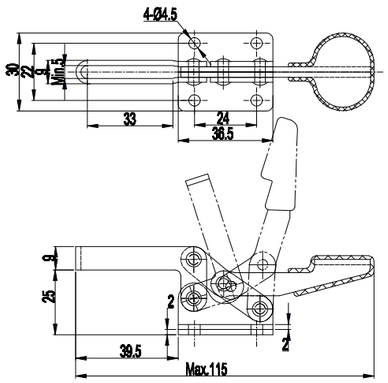

Unit:mm

CH-2300

CH-2301-B

CH-2500

CH-2501-B

CH-2600

CH-2601-B

材質：低碳鋼。 Material: Steel.

型號 MODEL	夾持力 HOLDING CAPACITY(kgf)	自重 WEIGHT (g)	壓頭螺絲型號 SPINDLE SUPPLIED	壓把開啟角度 BAR OPENS	手柄開啟角度 HANDLE OPENS
CH-2300	68	94	CH-FC-10138	90°	58°
CH-2301-B	68	94	CH-FC-10138	90°	58°
CH-2500	227	318	CH-FC-56300	90°	58°
CH-2501-B	227	318	CH-FC-56300	90°	58°
CH-2600	340	352	CH-FC-56300	90°	58°
CH-2601-B	340	352	CH-FC-56300	90°	58°

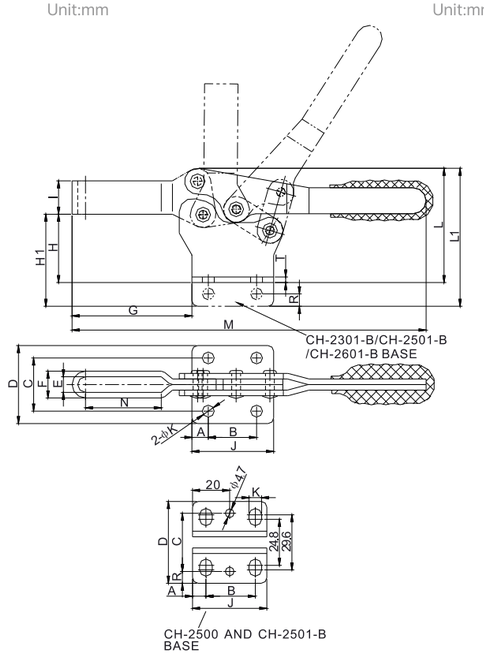

Unit:mm

型號 MODEL	A	B	C	D	E	F	G	H	H1	I	J	ΦK	L	L1	M	N	R	T
CH-2300	7.3	13.4	16.8	25.7	5	9	39	20.7	-	11	28	4.5	37.35	-	119	23.8	-	2
CH-2301-B	7.3	13.4	-	-	5	9	39	-	28	11	28	4.5	-	45.15	119	23.8	4.5	2
CH-2500	7.2	26.2	31.3	44	9.4	15.4	71	34.6	-	14.2	39.6	6.8	62.6	-	191	46.5	-	3
CH-2501-B	7.2	26.2	-	-	9.4	15.4	71	-	48.8	14.2	39.6	6.8	-	76.8	191	46.5	7.2	3
CH-2600	8.8	26	28.6	42	9.4	15.4	64	36	-	18	44	6.4	61.5	-	194	40	-	3
CH-2601-B	8.8	26	-	-	9.4	15.4	64	-	50	18	44	6.4	-	74.7	194	40	6.7	3

CH-2602-B

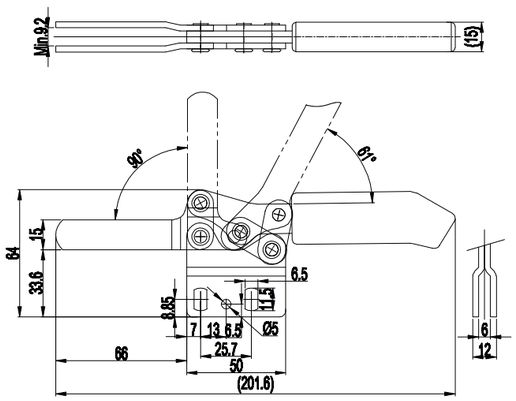

Unit:mm

CH-2602-B CH-2603-B CH-2604-B

材質：低碳鋼。 Material: Steel.

型號 MODEL	夾持力 HOLDING CAPACITY(kgf)	自重 WEIGHT (g)	壓頭螺絲型號 SPINDLE SUPPLIED	壓把開啟角度 BAR OPENS	手柄開啟角度 HANDLE OPENS
CH-2602-B	185	210	CH-FC-56212	90°	61°
CH-2603-B	105	185	CH-FC-065110	90°	64°
CH-2604-B	82	105	CH-FC-053808	90°	55°

CH-2603-B

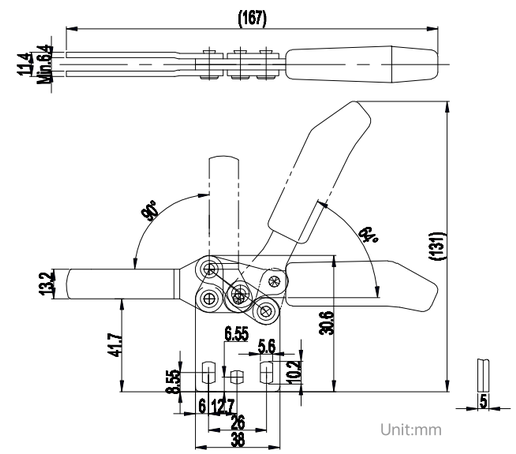

Unit:mm

CH-2604-B

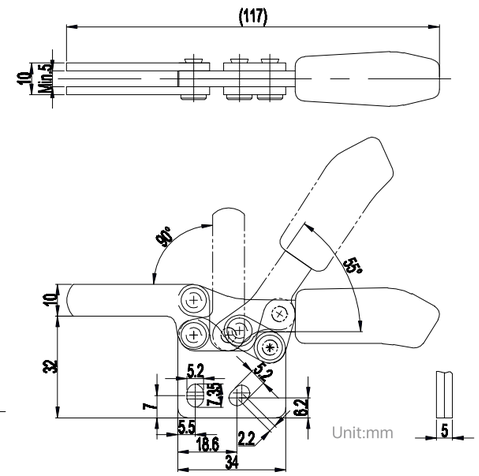

Unit:mm

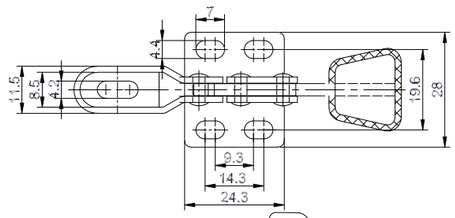

● 法蘭座 FLANGED BASE ● 直底座 STRAIGHT BASE

CH-20800 ●
■ CH-20800-SS ●

CH-21800 ●

材質：低碳鋼，標註 ■ 的為不鏽鋼。
Material: Steel, the product with ■ mark is available in stainless steel.

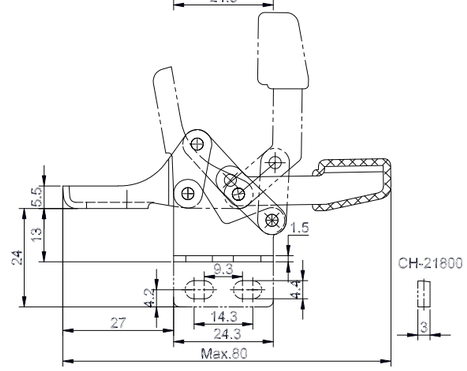

Unit:mm

型號 MODEL	夾持力 HOLDING CAPACITY(kgf)	自重 WEIGHT (g)	壓頭螺絲型號 SPINDLE SUPPLIED	壓把開啟角度 BAR OPENS	手柄開啟角度 HANDLE OPENS
CH-20800	30	40	CH-FC-042507	90°	103°
CH-21800	30	40	CH-FC-042507	90°	103°
CH-20800-SS	30	40	CH-FC-042507-SS	90°	103°

CH-21383

CH-25383

材質：低碳鋼。 Material: Steel.

型號 MODEL	夾持力 HOLDING CAPACITY(kgf)	自重 WEIGHT (g)	壓頭螺絲型號 SPINDLE SUPPLIED	壓把開啟角度 BAR OPENS	手柄開啟角度 HANDLE OPENS
CH-21383	250	250	CH-SA-065010	70°	75°
CH-25383	280	530	CH-SA-105015 OR CH-SA-086512	80°	86°

CH-21383

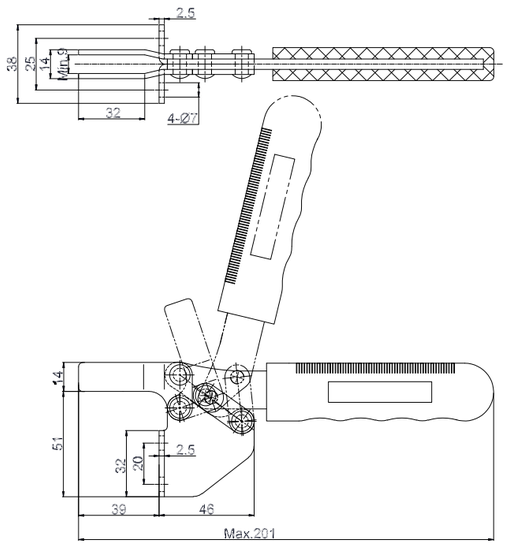

Unit:mm

CH-25383

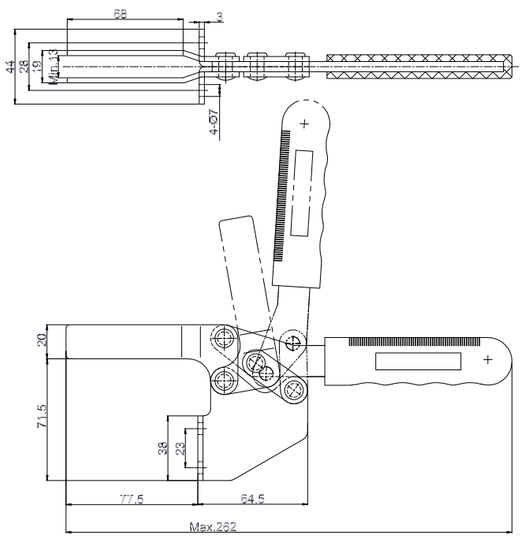

Unit:mm

● 法蘭座 FLANGED BASE ● 直底座 STRAIGHT BASE

CH-21382 ●
■ CH-21382-SS ●

CH-22382 ●

材質：低碳鋼，標註 ■ 的為不鏽鋼。
Material: Steel, the product with ■ mark is available in stainless steel.

型號 MODEL	夾持力 HOLDING CAPACITY(kgf)	自重 WEIGHT (g)	壓頭螺絲型號 SPINDLE SUPPLIED	壓把開啟角度 BAR OPENS	手柄開啟角度 HANDLE OPENS
CH-21382	250	228	CH-SA-065010	70°	75°
CH-22382	250	228	CH-SA-065010	70°	75°
CH-21382-SS	250	228	CH-SA-065010-SS	70°	75°

CH-21382 AND CH-22382

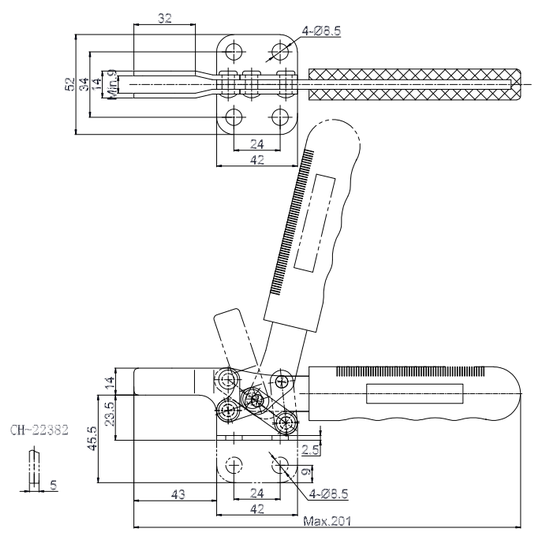

Unit:mm

● 法蘭座 FLANGED BASE ● 直底座 STRAIGHT BASE

CH-25382 ●

CH-26382 ●

材質：低碳鋼。 Material: Steel.

型號 MODEL	夾持力 HOLDING CAPACITY(kgf)	自重 WEIGHT (g)	壓頭螺絲型號 SPINDLE SUPPLIED	壓把開啟角度 BAR OPENS	手柄開啟角度 HANDLE OPENS
CH-25382	280	480	CH-SA-086512	80°	86°
CH-26382	280	480	CH-SA-086513	80°	86°

CH-25382 AND CH-26382

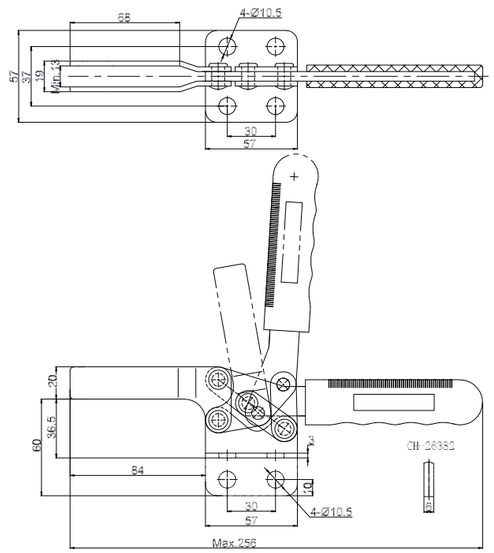

Unit:mm

CH-21385

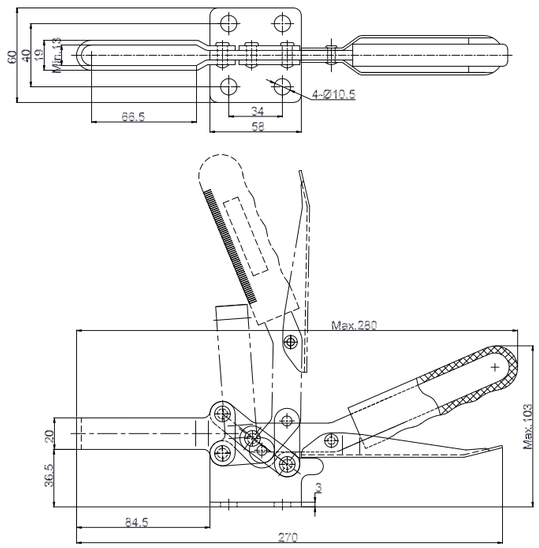

Unit:mm

● 法蘭座 FLANGED BASE ● 直底座 STRAIGHT BASE

CH-21385 ●

CH-21384 ●

CH-22384 ●

材質：低碳鋼。 Material: Steel.

型號 MODEL	夾持力 HOLDING CAPACITY(kgf)	自重 WEIGHT (g)	壓頭螺絲型號 SPINDLE SUPPLIED	壓把開啟角度 BAR OPENS	手柄開啟角度 HANDLE OPENS
CH-21385	300	560	CH-SA-38200	80°	89°
CH-21384	500	750	CH-SA-106515	65°	85°
CH-22384	500	750	CH-SA-106515	65°	85°

CH-21384 AND CH-22384

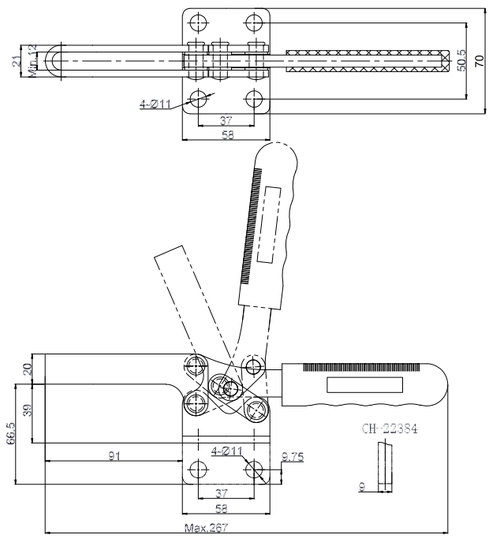

Unit:mm

CH-200-W

CH-200-WL

CH-200-WH

CH-200-WLH

CH-220-WH

CH-220-WLH

材質：低碳鋼。 Material: Steel.

型號 MODEL	夾持力 HOLDING CAPACITY(kgf)	自重 WEIGHT (g)	壓頭螺絲型號 SPINDLE SUPPLIED	壓把開啟角度 BAR OPENS	手柄開啟角度 HANDLE OPENS
CH-200-W	400	600	CH-FC-38312	75°	77°
CH-200-WL	400	640	CH-FC-38312	75°	77°
CH-200-WH	400	700	CH-FC-38412	75°	77°
CH-200-WLH	400	745	CH-FC-38412	75°	77°
CH-220-WH	400	790	CH-FC-38412	75°	77°
CH-220-WLH	400	830	CH-FC-38412	75°	77°

CH-200-W AND CH-220-WLH

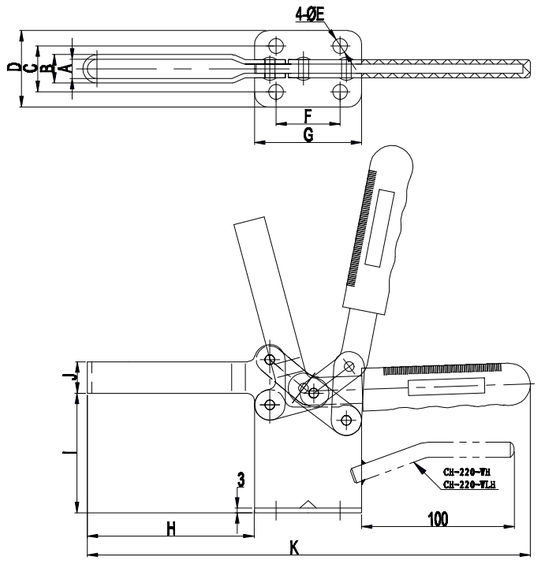

Unit:mm

型號 MODEL	A Min.	B	C	D	ΦE	F	G	H	I	J	K Max.
CH-200-W	12.6	18.6	30	50	10	42	70	60	54	20.5	240
CH-200-WL	12.6	18.6	30	50	10	42	70	110	54	20.5	290
CH-200-WH	12.6	18.6	30	50	10	42	70	60	79	20.5	240
CH-200-WLH	12.6	18.6	30	50	10	42	70	110	79	20.5	290
CH-220-WH	12.6	18.6	30	50	10	42	70	60	79	20.5	240
CH-220-WLH	12.6	18.6	30	50	10	42	70	110	79	20.5	290

CH-20448

材質：低碳鋼。 Material: Steel.

CH-20448

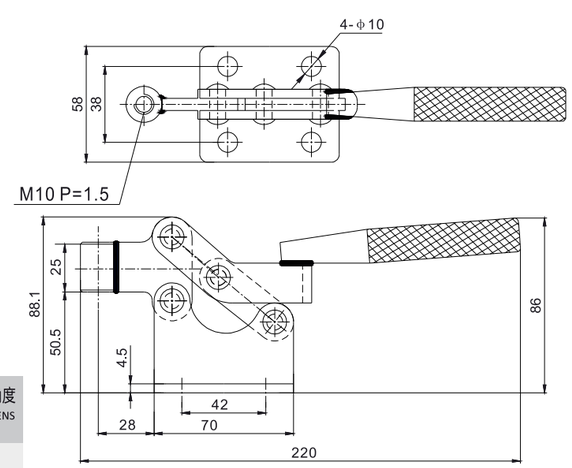

Unit:mm

型號 MODEL	夾持力 HOLDING CAPACITY(kgf)	自重 WEIGHT (g)	壓頭螺絲型號 SPINDLE SUPPLIED	壓把開啟角度 BAR OPENS	手柄開啟角度 HANDLE OPENS
CH-20448	350	760	CH-SA-105015	90°	83°

CH-301-AM
■ CH-301-AMSS

CH-301-BM

材質：低碳鋼，標註 ■ 的為不鏽鋼。
Material: Steel, the product with ■ mark is available in stainless steel.

型號 MODEL	夾持力 HOLDING CAPACITY(kgf)	自重 WEIGHT (g)	壓頭螺絲型號 SPINDLE SUPPLIED	手柄開啟角度 HANDLE OPENS	行程 PLUNGER STROKE(mm)
CH-301-AM	45	50	CH-SA-042007(NYLON)	190°	16.7
CH-301-BM	45	50	M6 P=1.0 NUT	190°	16.7
CH-301-AMSS	45	50	CH-SA-042007-SS	190°	16.7

CH-301-AM THRU CH-301-BM

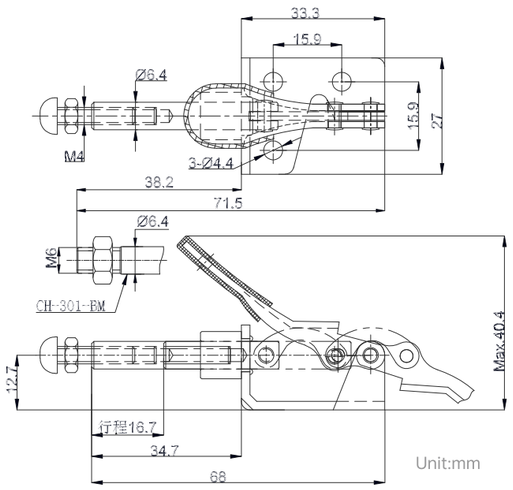

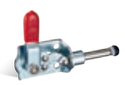

CH-301-CR

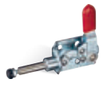

CH-301-CL

CH-302-CR

CH-302-CL

材質：低碳鋼，302系列的底座為鑄鋼。
Material: Steel, the base of 302 series is cast steel.

型號 MODEL	夾持力 HOLDING CAPACITY(kgf)	自重 WEIGHT (g)	壓頭螺絲型號 SPINDLE SUPPLIED	手柄開啟角度 HANDLE OPENS	行程 PLUNGER STROKE(mm)
CH-301-CR	40	56	CH-FC-042007	180°	16.4
CH-301-CL	40	56	CH-FC-042007	180°	16.4
CH-302-CR	82	60	CH-FC-064410	180°	20
CH-302-CL	82	60	CH-FC-064410	180°	20

CH-301-CR AND CH-301-CL

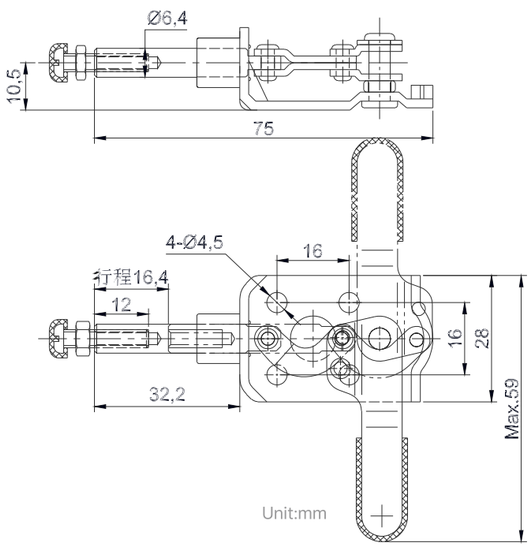

CH-302-CR AND CH-302-CL

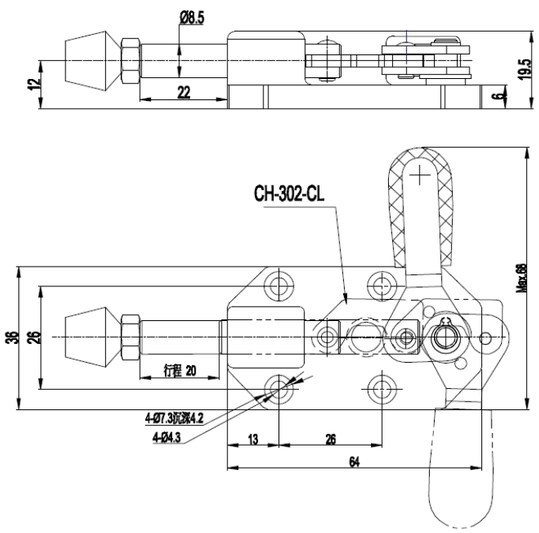

CH-302-FM
■ CH-302-FMSS

材質：低碳鋼，標註 ■ 的為不鏽鋼。
Material: Steel, the product with ■ mark is available in stainless steel.

型號 MODEL	夾持力 HOLDING CAPACITY(kgf)	自重 WEIGHT (g)	壓頭螺絲型號 SPINDLE SUPPLIED	手柄開啟角度 HANDLE OPENS	行程 PLUNGER STROKE(mm)
CH-302-FM	136	300	CH-SA-085012	180°	32
CH-302-FMSS	136	300	CH-SA-085012-SS	180°	32

CH-302-FM AND CH-302-FMSS

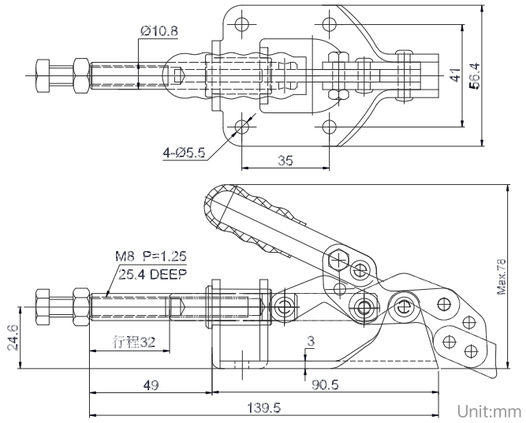

CH-36092M
■ CH-36092MSS

材質：低碳鋼，標註 ■ 的為不鏽鋼。
Material: Steel, the product with ■ mark is available in stainless steel.

型號 MODEL	夾持力 HOLDING CAPACITY(kgf)	自重 WEIGHT (g)	壓頭螺絲型號 SPINDLE SUPPLIED	手柄開啟角度 HANDLE OPENS	行程 PLUNGER STROKE(mm)
CH-36092M	180	397	CH-SA-085012	180°	32
CH-36092MSS	180	397	CH-SA-085012-SS	180°	32

CH-36003M

材質：低碳鋼，底座為鍛造合金鋼。
Material: Steel, the base is forged alloy steel.

型號 MODEL	夾持力 HOLDING CAPACITY(kgf)	自重 WEIGHT (g)	壓頭螺絲型號 SPINDLE SUPPLIED	手柄開啟角度 HANDLE OPENS	行程 PLUNGER STROKE(mm)
CH-36003M	272	395	CH-SA-085012	180°	31.8

CH-36092M AND CH-36092MSS

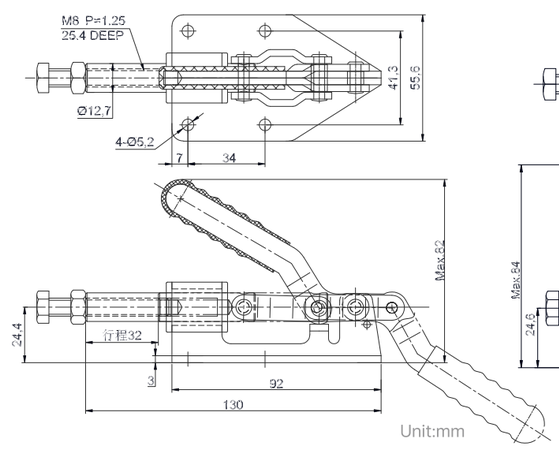

CH-36003M

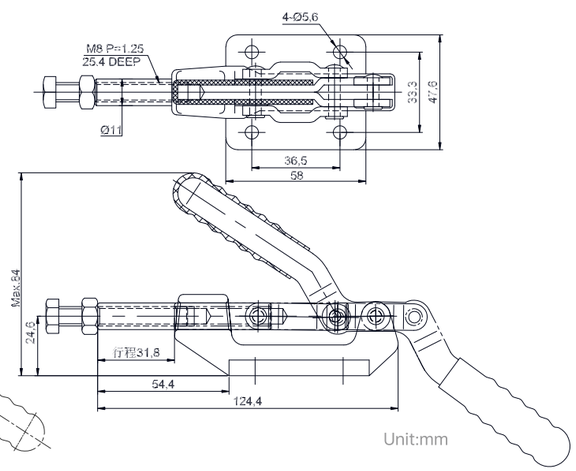

● 法蘭座 FLANGED BASE ● 直底座 STRAIGHT BASE

CH-36010M ●

CH-36012M ●

材質：低碳鋼。 Material: Steel.

型號 MODEL	夾持力 HOLDING CAPACITY(kgf)	自重 WEIGHT (g)	壓頭螺絲型號 SPINDLE SUPPLIED	手柄開啟角度 HANDLE OPENS	行程 PLUNGER STROKE(mm)
CH-36010M	364	800	CH-SA-105015	180°	40.8
CH-36012M	364	800	CH-SA-105015	180°	40.8

CH-36010M AND CH-36012M

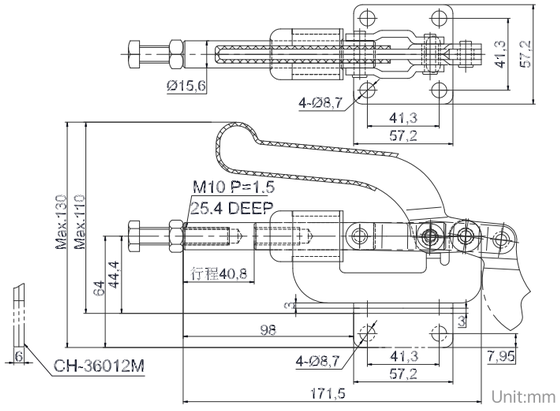

CH-30607M

CH-30608M

材質：低碳鋼，底座為鍛造合金鋼。
Material: Steel, the base is forged alloy steel.

型號 MODEL	夾持力 HOLDING CAPACITY(kgf)	自重 WEIGHT (g)	壓頭螺絲型號 SPINDLE SUPPLIED	手柄開啟角度 HANDLE OPENS	行程 PLUNGER STROKE(mm)
CH-30607M	318	700	CH-SA-085012	180°	41.3
CH-30608M	318	700	CH-SA-085012	180°	41.3

CH-30607M AND CH-30608M

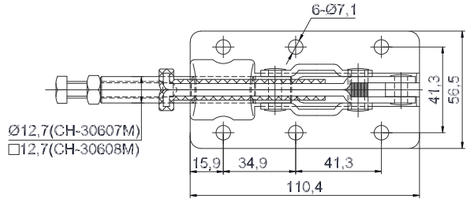

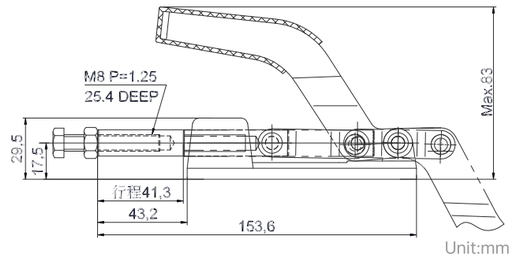

CH-36330ML

材質：低碳鋼，底座為鑄鋼。
Material: Steel, the base is cast steel.

型號 MODEL	夾持力 HOLDING CAPACITY(kgf)	自重 WEIGHT (g)	壓頭螺絲型號 SPINDLE SUPPLIED	手柄開啟角度 HANDLE OPENS	行程 PLUNGER STROKE(mm)
CH-36330ML	350	1250	CH-SA-085012	185°	78

CH-36330ML

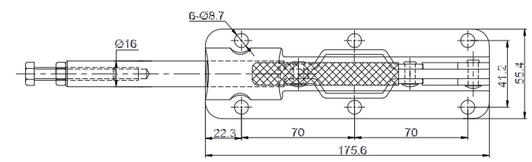

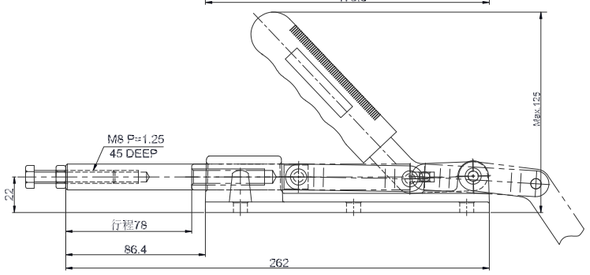

Unit:mm

CH-36202M
■ CH-36202M-SS

CH-36204M
■ CH-36204M-SS

CH-36224M
■ CH-36224M-SS

材質：低碳鋼，標註 ■ 的為不鏽鋼。
Material: Steel, the product with ■ mark is available in stainless steel.

型號 MODEL	夾持力 HOLDING CAPACITY(kgf)	自重 WEIGHT (g)	壓頭螺絲型號 SPINDLE SUPPLIED	行程 PLUNGER STROKE(mm)	固定座搭配型號 OPTIONAL MOUNTING BRACKET
CH-36202M	91	113	CH-SA-064010	20	CH-36203
CH-36204M	136	270	CH-SA-085012	39	CH-36205
CH-36224M	318	770	CH-SA-105015	65.5	CH-36225M
CH-36202M-SS	91	113	CH-SA-064010-SS	20	CH-36203
CH-36204M-SS	136	270	CH-SA-085012-SS	39	CH-36205
CH-36224M-SS	318	770	CH-SA-105015-SS	65.5	CH-36225M

CH-36202M THRU CH-36224M

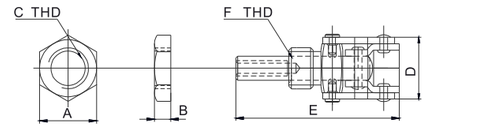

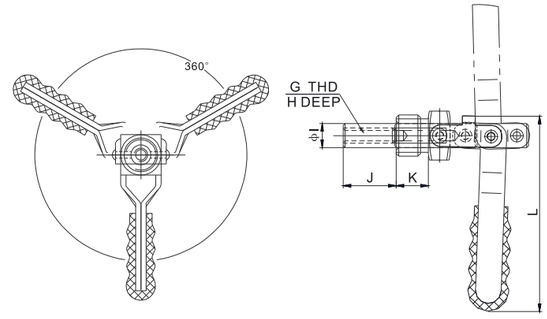

CH-36225M

CH-36203

CH-36205

CH-36225M

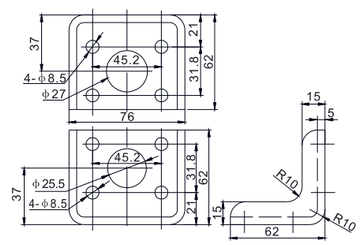

Unit:mm

CH-36203

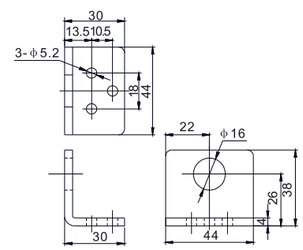

Unit:mm

CH-36205

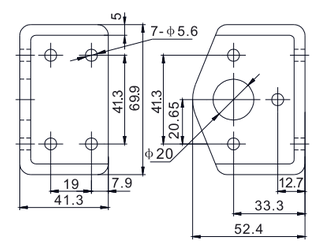

Unit:mm

Unit:mm

型號 MODEL	A	B	C	F	D	E	G	H	ΦI	J	K	L Max.
CH-36202M	24	6.5	M16	P=1.5	24	63.5	M6 P=1	15.8	9.4	21	12.5	76
CH-36204M	30	6.5	M20	P=1.5	28.2	115	M8 P=1.25	25.4	10.9	40.5	15.9	101
CH-36224M	41	8	M27	P=2.0	40	169.6	M10 P=1.5	31.7	15.7	70	22.3	139
CH-36202M-SS	24	6.5	M16	P=1.5	24	63.5	M6 P=1	15.8	9.4	21	12.5	76
CH-36204M-SS	30	6.5	M20	P=1.5	28.2	115	M8 P=1.25	25.4	10.9	40.5	15.9	101
CH-36224M-SS	41	8	M27	P=2.0	40	169.6	M10 P=1.5	31.7	15.7	70	22.3	139

安裝說明：此系列夾鉗依靠外螺紋安裝。
Installation instruction: This series clamps are installed with external thread.

CH-36330M

材質：低碳鋼，底座為鍛造合金鋼。
Material: Steel, the base is forged alloy steel.

型號 MODEL	夾持力 HOLDING CAPACITY(kgf)	自重 WEIGHT (g)	壓頭螺絲型號 SPINDLE SUPPLIED	手柄開啟角度 HANDLE OPENS	行程 PLUNGER STROKE(mm)
CH-36330M	1136	1050	CH-SA-105015	180°	50

CH-304-CM

CH-305-CM

CH-304-EM
■ CH-304-EMSS

CH-305-EM

CH-304-HM

CH-305-HM

材質：低碳鋼，標註 ■ 的為不鏽鋼，底座為鑄鋼；手柄銷軸孔裝有耐磨套。
Material: Steel, the product with ■ mark is available in stainless steel, the base is cast steel; With bushings in the handle pin postion.

型號 MODEL	夾持力 HOLDING CAPACITY(kgf)	自重 WEIGHT (g)	壓頭螺絲型號 SPINDLE SUPPLIED	手柄開啟角度 HANDLE OPENS	行程 PLUNGER STROKE(mm)
CH-304-CM	227	340	CH-SA-085012	180°	32
CH-305-CM	227	340	CH-SA-085012	180°	32
CH-304-EM	386	580	CH-SA-105015	180°	42
CH-305-EM	386	580	CH-SA-105015	180°	42
CH-304-HM	680	1480	CH-SA-125017	180°	62
CH-305-HM	680	1480	CH-SA-125017	180°	62
CH-304-EMSS	386	580	CH-SA-105015-SS	180°	42

CH-36330M

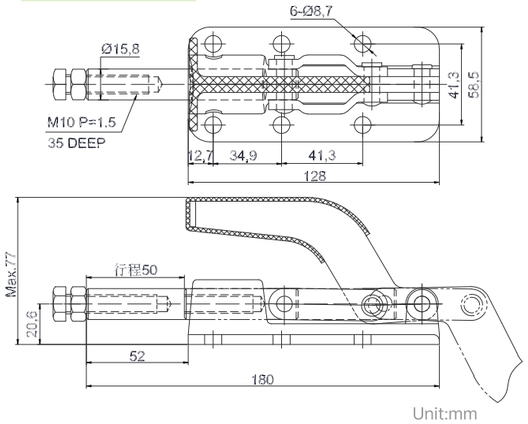

CH-304 /305 SERIES

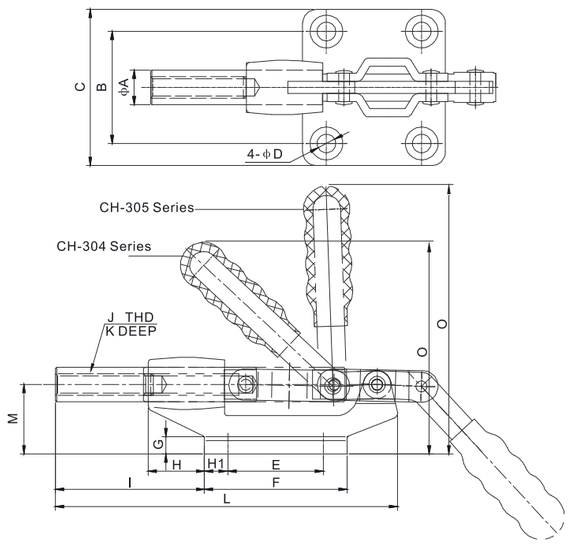

Unit:mm

型號 MODEL	ΦA	B	C	ΦD	E	F	G	H	H1	I	J	K	L	M	O Max.
CH-304-CM	12.7	41.1	57.2	6.7	35	52.4	4.8	20.6	8.7	54.8	M8P=1.25	30.2	125.7	25.4	76.5
CH-305-CM	12.7	41.1	57.2	6.7	35	52.4	4.8	20.6	8.7	54.8	M8P=1.25	30.2	125.7	25.4	97
CH-304-EM	16	41.1	57.2	8.3	41.1	58.8	4.8	31.8	8.8	76	M10P=1.5	39.2	158.2	31.8	96.4
CH-305-EM	16	41.1	57.2	8.3	41.1	58.8	4.8	31.8	8.8	76	M10P=1.5	39.2	158.2	31.8	123
CH-304-HM	19.2	50.8	71.4	8.5	50.8	73.2	6.4	50.8	11.1	118.8	M12P=1.75	49.2	234	44.4	128
CH-305-HM	19.2	50.8	71.4	8.5	50.8	73.2	6.4	50.8	11.1	118.8	M12P=1.75	49.2	234	44.4	171.6
CH-304-EMSS	16	41.1	57.2	8.3	41.1	58.8	4.8	31.8	8.8	76	M10P=1.5	39.2	158.2	31.8	96.4

CH-305-CMT

CH-304-EML

CH-305-HMY

材質：低碳鋼，底座為鑄鋼。
Material: Steel, the base is cast steel.

型號 MODEL	夾持力 HOLDING CAPACITY(kgf)	自重 WEIGHT (g)	壓頭螺絲型號 SPINDLE SUPPLIED	行程 PLUNGER STROKE(mm)
CH-305-CMT	227	395	CH-SA-085012	32
CH-304-EML	386	663	CH-SA-105015	42
CH-305-HMY	680	1600	CH-SA-125017	62

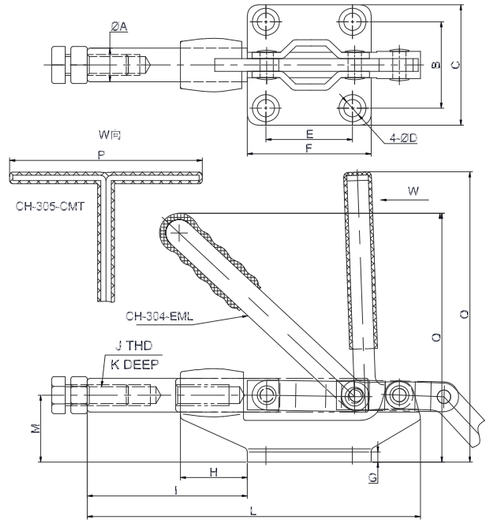

Unit:mm

型號 MODEL	A	B	C	D	E	F	G	H	I	J	K	L	M	O Max.	P Max.
CH-305-CMT	12.7	41.1	57.2	6.7	35	52.4	4.8	20.6	54.8	M8P=1.25	30	125.7	25.4	131.5	91.5
CH-304-EML	16	41.1	57.2	8.3	41.1	58.8	4.8	31.8	76	M10P=1.5	39.5	158.2	31.8	119	-
CH-305-HMY	19.2	50.8	71.4	8.3	50.8	73.2	6.4	50.8	118.8	M12P=1.75	49.2	234	44.4	218	124.4

CH-305-BM

CH-304-HMY

材質：低碳鋼，底座為鑄鋼。
Material: Steel, the base is cast steel.

型號 MODEL	夾持力 HOLDING CAPACITY(kgf)	自重 WEIGHT (g)	壓頭螺絲型號 SPINDLE SUPPLIED	手柄開啟角度 HANDLE OPENS	行程 PLUNGER STROKE(mm)
CH-305-BM	180	480	CH-SA-085012	185°	33.8
CH-304-HMY	680	1600	CH-SA-125017	180°	62

CH-305-BM

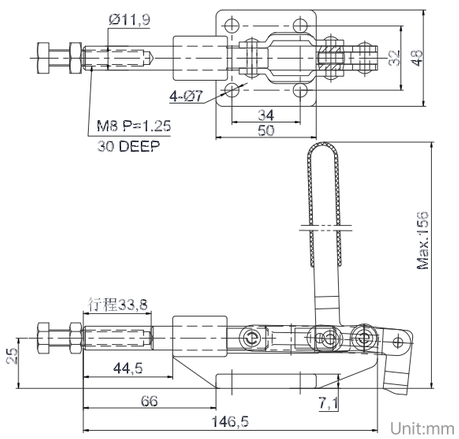

CH-304-HMY

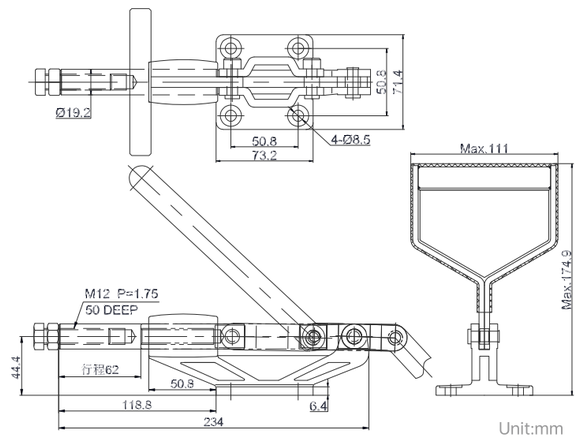

CH-36015-T

材質：低碳鋼，底座為鑄鋼。
Material: Steel, the base is cast steel.

型號 MODEL	夾持力 HOLDING CAPACITY(kgf)	自重 WEIGHT (g)	壓頭螺絲型號 SPINDLE SUPPLIED	手柄開啟角度 HANDLE OPENS	行程 PLUNGER STROKE(mm)
CH-36015-T	255	150	CH-FC-064410	180°	17.5

CH-30510M

CH-30511M

材質：低碳鋼。Material: Steel.

型號 MODEL	夾持力 HOLDING CAPACITY(kgf)	自重 WEIGHT (g)	壓頭螺絲型號 SPINDLE SUPPLIED	手柄開啟角度 HANDLE OPENS	行程 PLUNGER STROKE(mm)
CH-30510M	1100	1750	CH-SA-125017	105°	49
CH-30511M	1100	1300	CH-SA-125017	105°	49

CH-36015-T

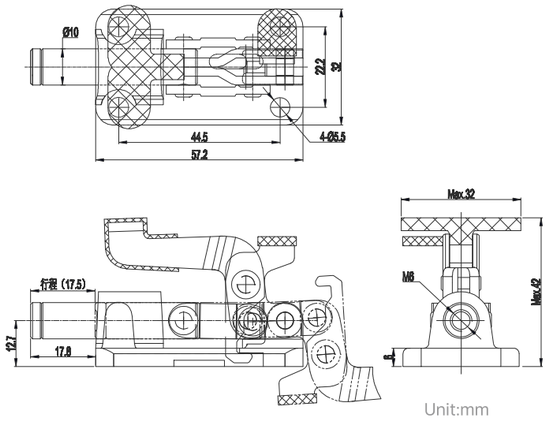

CH-30510M

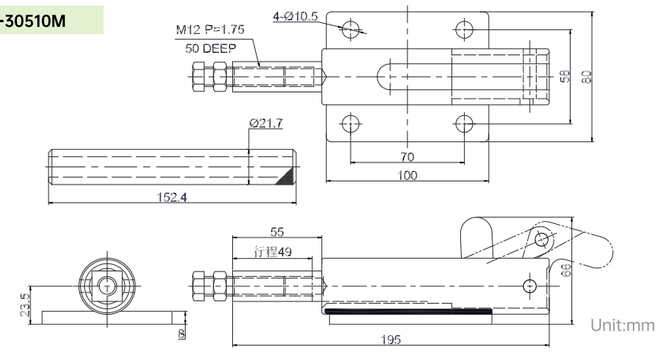

CH-30511M

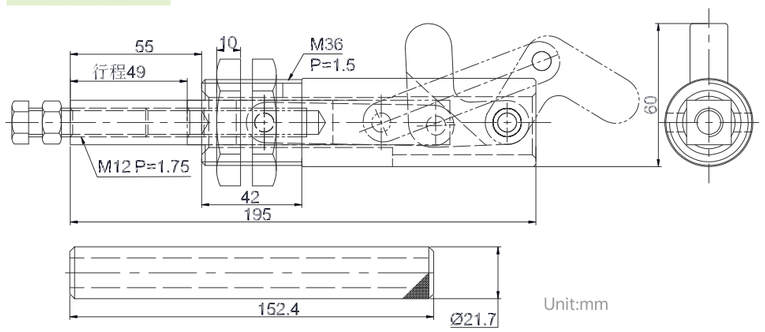

CH-30509M CH-30609M CH-30519M CH-30619M

材質：低碳鋼。Material: Steel.

型號 MODEL	夾持力 HOLDING CAPACITY(kgf)	自重 WEIGHT (g)	壓頭螺絲型號 SPINDLE SUPPLIED	手柄開啟角度 HANDLE OPENS	行程 PLUNGER STROKE(mm)
CH-30509M	1136	1414	CH-SA-125017	90°	43.5
CH-30609M	2273	2968	CH-SA-165020	90°	56.5
CH-30519M	1136	1700	CH-SA-125017	170°	59.5
CH-30619M	2273	3600	CH-SA-165020	170°	77.8

CH-30509M AND CH-30609M

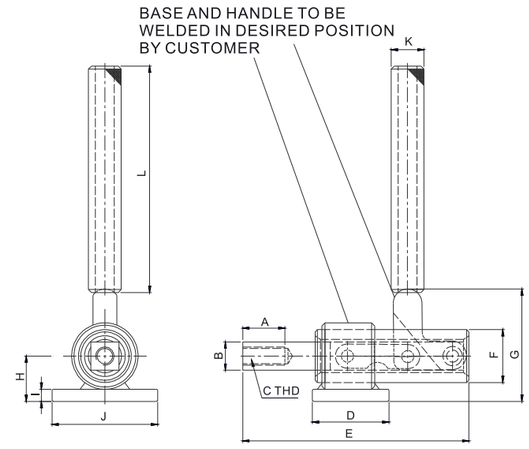

Unit:mm

型號 MODEL	A	□B	C	D	E	F	G	H	I	J	ΦK	L
CH-30509M	30	18.7	M12 P=1.75	50	150.4	35	73	30	8	70	21.7	152.4
CH-30609M	38.1	25	M16 P=2	70	193	44.5	88.5	40	11.8	90	27.2	152.4

CH-30519M AND CH-30619M

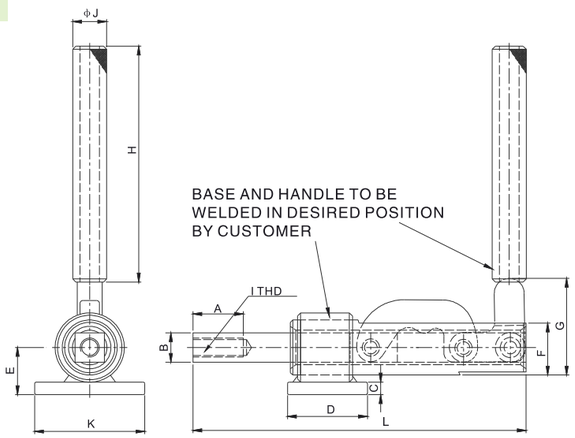

Unit:mm

型號 MODEL	A	□B	C	D	E	F	G	H	I	ΦJ	K	L
CH-30519M	30	18.7	8	50.8	30	34.5	73	152.4	M12 P=1.75	21.7	70	212
CH-30619M	38.1	25	11.8	70	40	44.5	88.5	152.4	M16 P=2.0	27.2	90	273.2

CH-30250

CH-30450

材質：低碳鋼。 Material: Steel.

CH-30250 AND CH-30450

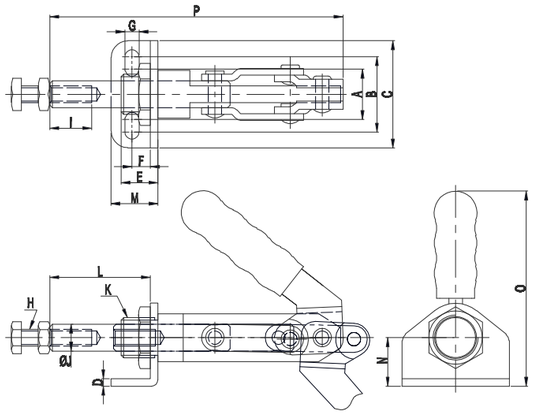

型號 MODEL	夾持力 HOLDING CAPACITY(kgf)	自重 WEIGHT (g)	壓頭螺絲型號 SPINDLE SUPPLIED	手柄開啟角度 HANDLE OPENS	行程 PLUNGER STROKE(mm)
CH-30250	250	385	CH-SA-062010	190°	32
CH-30450	450	774	CH-SA-103015	185°	38

Unit:mm

型號 MODEL	A	B	C	D	E	F	G	H	I	ΦJ	K	L	M	N	O Max.	P
CH-30250	30	42	57	4	17	10	6.5	M6 P=1.0	12	11	M20 P=1.5	52.7	23	24	85	138
CH-30450	30	45	64	4.5	22	11	8.5	M10 P=1.5	25	16	M24 P=1.5	60	28	29	116.5	175

CH-30600

CH-31200

CH-32500

CH-35000

材質：低碳鋼，底座和手柄為鑄鋼。
Material: Steel, the base and handle is made by cast steel.

CH-30600 CH-31200 CH-32500 CH-35000

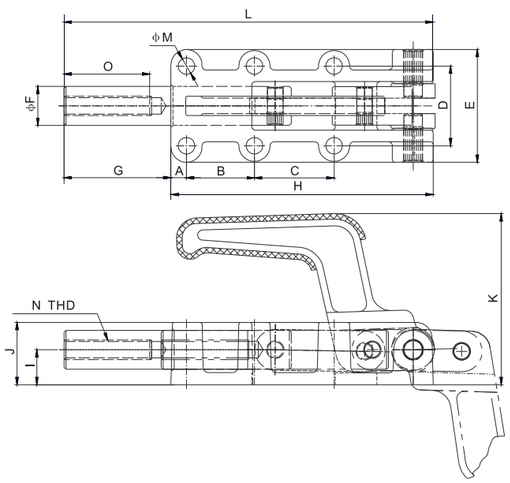

型號 MODEL	夾持力 HOLDING CAPACITY(kgf)	自重 WEIGHT (g)	壓頭螺絲型號 SPINDLE SUPPLIED	手柄開啟角度 HANDLE OPENS	行程 PLUNGER STROKE(mm)
CH-30600	600	570	CH-SA-086512	185°	32
CH-31200	1200	1550	CH-SA-107515	185°	50
CH-32500	2500	4100	CH-SA-127517	185°	75
CH-35000	5000	6500	CH-SA-167520	185°	100

Unit:mm

型號 MODEL	A	B	C	D	E	ΦF	G	H	I	J	K Max.	L	ΦM	N	O
CH-30600	25	36.5	-	33.6	48	14	38	89	12	22	68.5	127	5.5	M8 P=1.25	30
CH-31200	8	35	41	41	58	20	55	135	18	32	88	190	8.5	M10 P=1.5	40
CH-32500	12.7	45	45	54	83	25	97.8	200	22	41.5	110	298	10.3	M12 P=1.75	60
CH-35000	12	70	70	57	84	30	138	254	28	50	127.8	392	10.3	M16 P=2	60

CH-30600HL

CH-31200HL

CH-32500HL

CH-35000HL

材質：低碳鋼，底座為鑄鋼。
Material: Steel, the base is cast steel.

CH-30600HL CH-31200HL CH-32500HL CH-35000HL

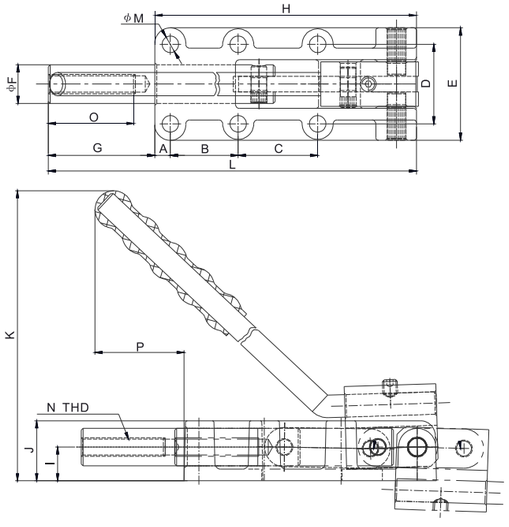

型號 MODEL	夾持力 HOLDING CAPACITY(kgf)	自重 WEIGHT (g)	壓頭螺絲型號 SPINDLE SUPPLIED	手柄開啟角度 HANDLE OPENS	行程 PLUNGER STROKE(mm)
CH-30600HL	600	660	CH-SA-086512	185°	32
CH-31200HL	1200	1750	CH-SA-107515	185°	50
CH-32500HL	2500	4320	CH-SA-127517	185°	75
CH-35000HL	5000	7100	CH-SA-167520	185°	100

Unit:mm

型號 MODEL	A	B	C	D	E	ΦF	G	H	I	J	K Max.	L	ΦM	N	O	P
CH-30600HL	25	36.5	-	33.6	48	14	38	89	12	22	135	127	5.5	M8 P=1.25	30	65
CH-31200HL	8	35	41	41	58	20	55	135	18	32	200	190	8.5	M10 P=1.5	42	100
CH-32500HL	12.7	45	45	54	83	25	97.8	200	22	41.5	265	298	10.3	M12 P=1.75	60	115
CH-35000HL	12	70	70	57	84	30	138	254	28	50	365	392	10.3	M16 P=2	60	172

CH-30600PR

CH-31200PR

CH-32500PR

材質：低碳鋼，底座為鑄鋼。
Material: Steel, the base is cast steel.

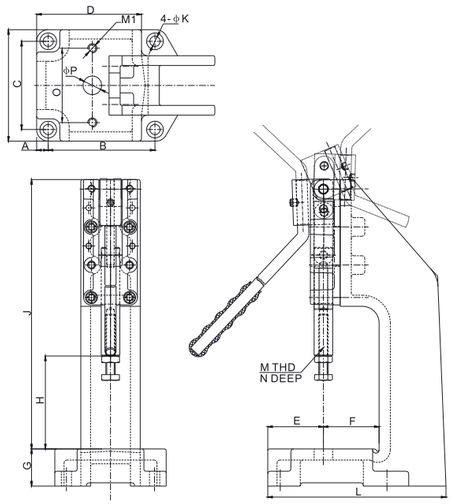

型號 MODEL	夾持力 HOLDING CAPACITY(kgf)	自重 WEIGHT (g)	壓頭螺絲型號 SPINDLE SUPPLIED	手柄開啟角度 HANDLE OPENS	行程 PLUNGER STROKE(mm)
CH-30600PR	600	3700	CH-SA-086512	185°	32
CH-31200PR	1200	8740	CH-SA-107515	185°	50
CH-32500PR	2500	18830	CH-SA-127517	185°	75

Unit:mm

型號 MODEL	A	B	C	D	E	F	G	H	I	J	ΦK	L	M	N	ΦP	M1	O
CH-30600PR	12.1	95	80	94	50	50	30	75	100	202	9	155	M8 P=1.25	30	15.6	M8*1.25	70
CH-31200PR	12.5	115	95	115.7	61.7	62	40	100	120	290	11	203	M10 P=1.5	42	20	M10*1.5	80
CH-32500PR	14	145	125	139.5	68.5	75	50	120	150	418	11	238	M12 P=1.75	60	30	M10*1.5	90

CH-36006

材質：低碳鋼。 Material: Steel.

型號 MODEL	夾持力 HOLDING CAPACITY(kgf)	自重 WEIGHT (g)	壓頭螺絲型號 SPINDLE SUPPLIED	手柄開啟角度 HANDLE OPENS	行程 PLUNGER STROKE(mm)
CH-36006	50	64	CH-SA-041507	93°	12

CH-36070

材質：低碳鋼。 Material: Steel.

型號 MODEL	夾持力 HOLDING CAPACITY(kgf)	自重 WEIGHT (g)	壓頭螺絲型號 SPINDLE SUPPLIED	手柄開啟角度 HANDLE OPENS	行程 PLUNGER STROKE(mm)
CH-36070	50	100	CH-SA-051508	66°	10

● 法蘭座 FLANGED BASE ● 直底座 STRAIGHT BASE

CH-302-DM ●
■ CH-302-DMSS ●

CH-30282M ●

材質：低碳鋼，標註 ■ 的為不鏽鋼。
Material: Steel, the product with ■ mark is available in stainless steel.

型號 MODEL	夾持力 HOLDING CAPACITY(kgf)	自重 WEIGHT (g)	手柄開啟角度 HANDLE OPENS	行程 PLUNGER STROKE(mm)
CH-302-DM	160	454	45°	12
CH-30282M	160	454	45°	12
CH-302-DMSS	160	454	45°	12

* 手柄下壓為鎖緊狀態 Plunger Locks in Extended Position Only.

CH-36006

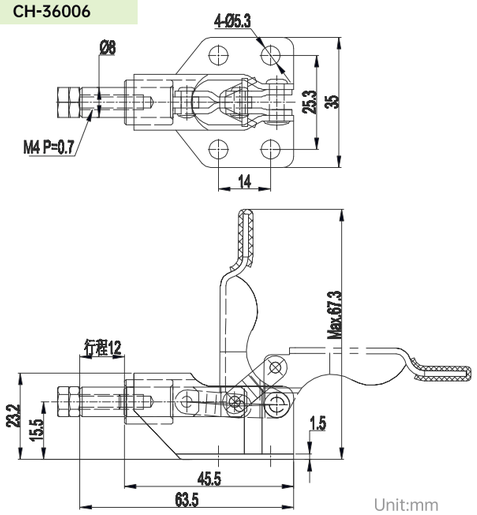

Unit:mm

CH-36070

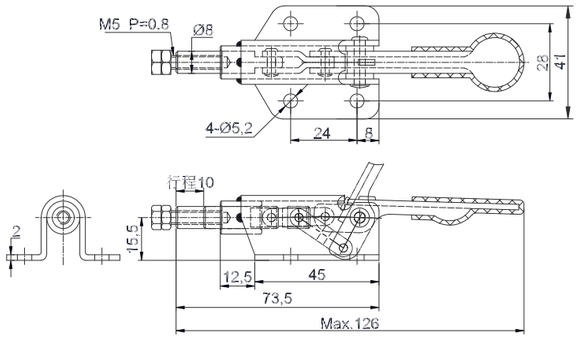

Unit:mm

CH-302-DM CH-302-DMSS CH-30282M

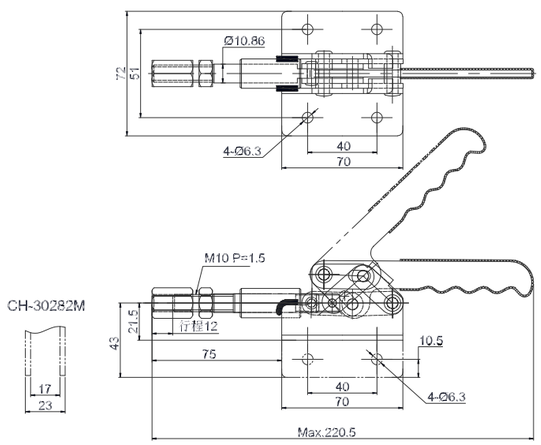

Unit:mm

● 法蘭座 FLANGED BASE ● 直底座 STRAIGHT BASE

CH-30290M ●

CH-30292M ●

材質：低碳鋼。 Material: Steel.

型號 MODEL	夾持力 HOLDING CAPACITY(kgf)	自重 WEIGHT (g)	手柄開啟角度 HANDLE OPENS	行程 PLUNGER STROKE(mm)
CH-30290M	295	1270	45°	23
CH-30292M	295	1270	45°	23

* 手柄下壓為鎖緊狀態 Plunger Locks in Extended Position Only.

CH-36020

CH-36020-K

材質：低碳鋼。 Material: Steel.

型號 MODEL	夾持力 HOLDING CAPACITY(kgf)	自重 WEIGHT (g)	壓頭螺絲型號 SPINDLE SUPPLIED	手柄開啟角度 HANDLE OPENS	行程 PLUNGER STROKE(mm)
CH-36020	180	380	CH-SA-085012	144.5°	29.7
CH-36020-K	180	380	CH-SA-085012	144.5°	29.7

* CH-36020-K導筒上裝有一個鍵防止頂軸轉動。
CH-36020-K has a key way to keep the Plunger form rotating.

CH-31501

材質：低碳鋼。 Material: Steel.

型號	夾持力 HOLDING CAPACITY(kgf)	自重 WEIGHT (g)	手柄開啟角度 HANDLE OPENS	行程 PLUNGER STROKE(mm)
CH-31501	200	380	190°	30

CH-30290M AND CH-30292M

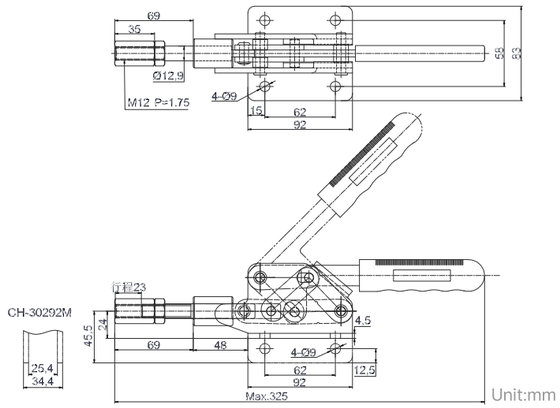

Unit:mm

CH-36020 AND CH-36020-K

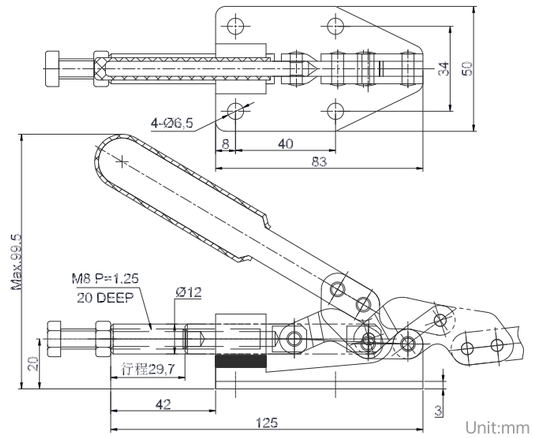

Unit:mm

CH-31501

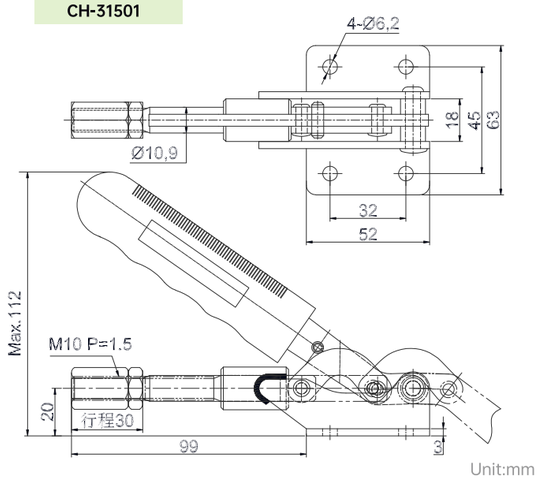

Unit:mm

CH-36060

材質：低碳鋼。 Material: Steel.

型號 MODEL	夾持力 HOLDING CAPACITY(kgf)	自重 WEIGHT (g)	壓頭螺絲型號 SPINDLE SUPPLIED	手柄開啟角度 HANDLE OPENS	行程 PLUNGER STROKE(mm)
CH-36060	300	690	CH-SA-083012	76°	28

* 手柄下壓為鎖緊狀態 Plunger Locks in Extended Position Only.

CH-303-EM

CH-303-EMK

材質：低碳鋼。 Material: Steel.

型號 MODEL	夾持力 HOLDING CAPACITY(kgf)	自重 WEIGHT (g)	手柄開啟角度 HANDLE OPENS	行程 PLUNGER STROKE(mm)
CH-303-EM	454	965	190°	50
CH-303-EMK	454	965	190°	50

* CH-303-EMK導筒上裝有一個鍵防止頂軸轉動。
CH-303-EMK has a key way to keep the Plunger form rotating.

CH-30513

材質：低碳鋼，底座為鑄鋼。
Material: Steel, the base is cast steel.

型號 MODEL	夾持力 HOLDING CAPACITY(kgf)	自重 WEIGHT (g)	壓頭螺絲型號 SPINDLE SUPPLIED	手柄開啟角度 HANDLE OPENS	行程 PLUNGER STROKE(mm)
CH-30513	1600	4200	CH-SA-185025	180°	76

CH-36060

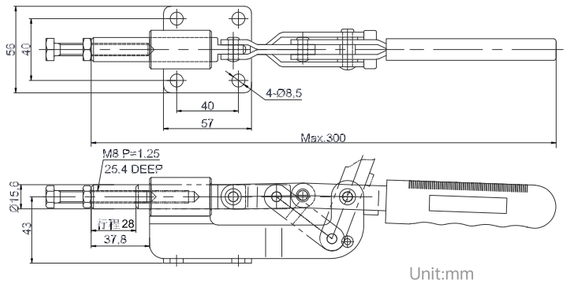

CH-303-EM AND CH-303-EMK

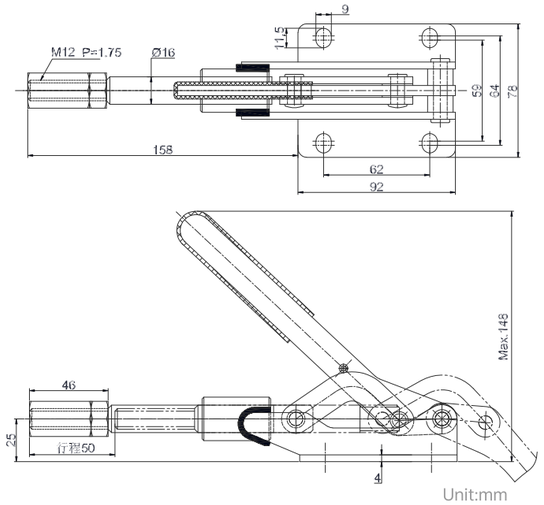

CH-30513

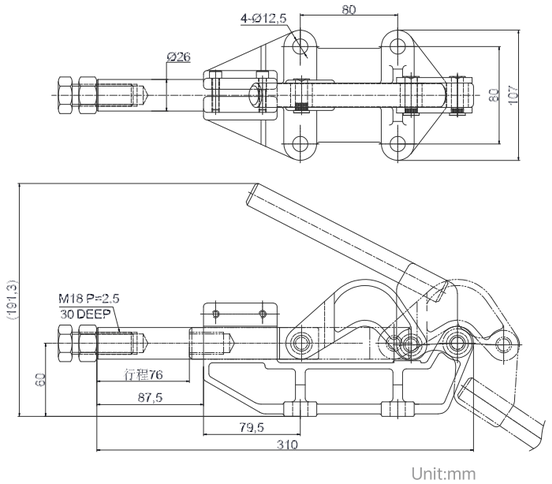

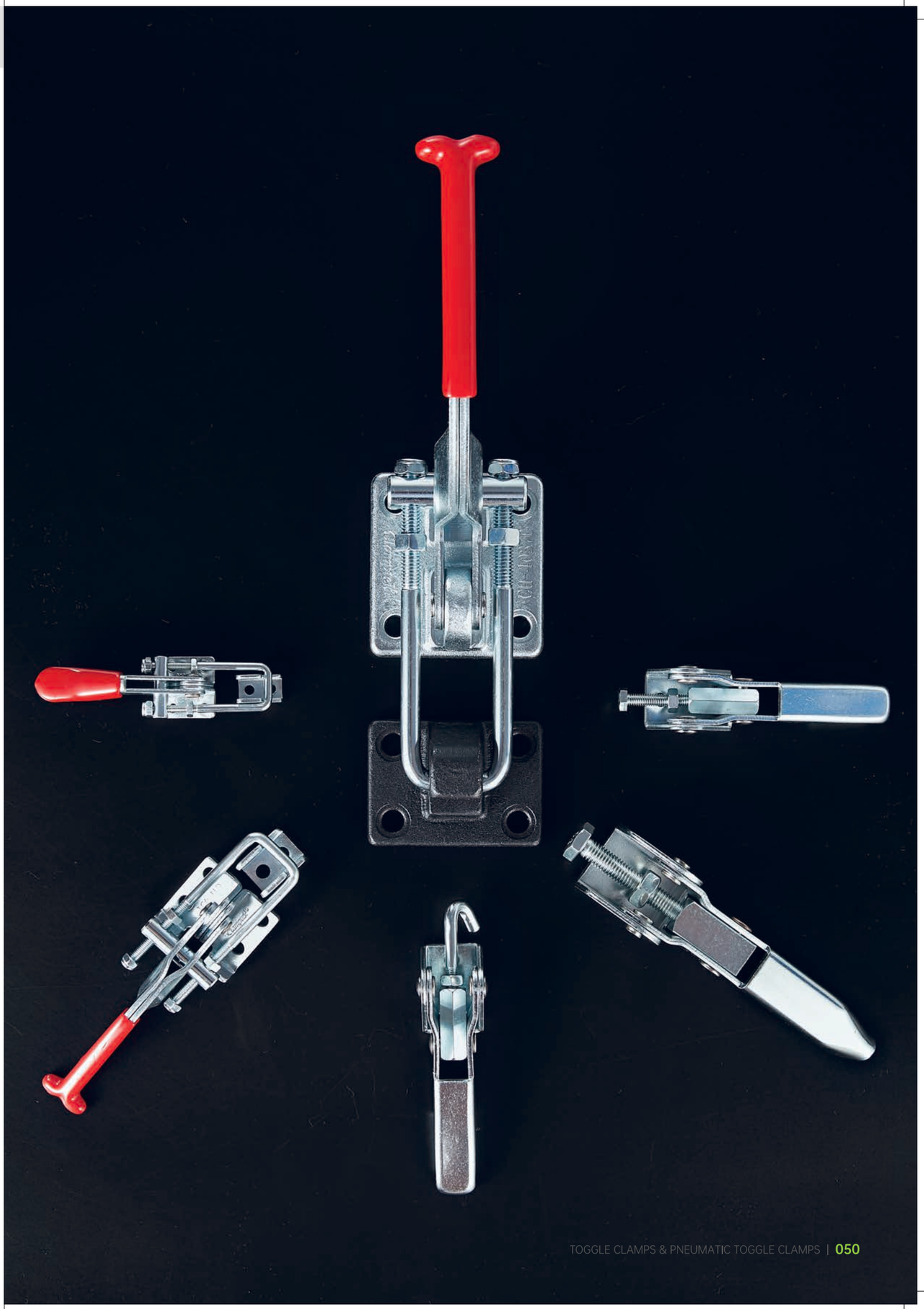

CH-40323
■ CH-40323-SS

CH-431
■ CH-431-SS

CH-40341
■ CH-40341-SS

材質：低碳鋼，標註 ■ 的為不鏽鋼。
Material: Steel, the product with ■ mark is available in stainless steel.

型號 MODEL	夾持力 HOLDING CAPACITY(kgf)	自重 WEIGHT (g)
CH-40323	163	70
CH-431	318	225
CH-40341	900	680
CH-40323-SS	163	70
CH-431-SS	318	225
CH-40341-SS	900	680

CH-40323 THRU CH-40341

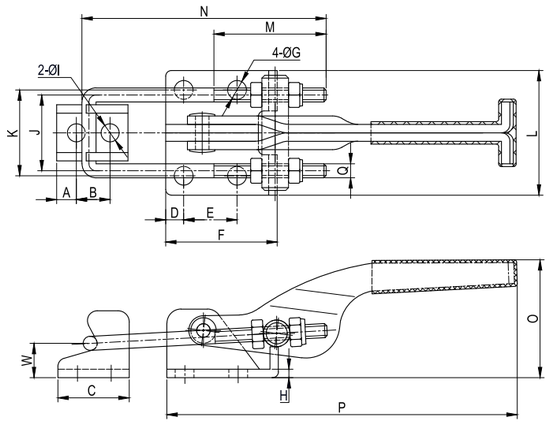

Unit:mm

型號 MODEL	A	B	C	D	E	F	ΦG	H	ΦI	J	K	L	M	N	O Max.	P Max.	Q	W
CH-40323	5	10	20	5.15	15.9	26.2	4.4	2	4.4	19	19	28.2	24	57	32.5	78	M4 P=0.7	13
CH-431	7	12	25.4	6.4	19	39.7	6.7	3	6.4	27	31.6	44.4	40	87	44	126	M5 P=0.8	12.2
CH-40341	9.5	19.2	38.1	9.5	41.3	60.3	8.5	4	8.5	44.5	38.1	54	52	115	77.5	177	M8 P=1.25	23.2
CH-40323-SS	5	10	20	5.15	15.9	26.2	4.4	2	4.4	19	19	28.2	24	57	32.5	78	M4 P=0.7	13
CH-431-SS	7	12	25.4	6.4	19	39.7	6.7	3	6.4	27	31.6	44.4	40	87	44	126	M5 P=0.8	12.2
CH-40341-SS	9.5	19.2	38.1	9.5	41.3	60.3	8.5	4	8.5	44.5	38.1	54	52	115	77.5	177	M8 P=1.25	23.2

CH-40324
■ CH-40324-SS

CH-40334
■ CH-40334-SS

CH-40344
■ CH-40344-SS

材質：低碳鋼，標註 ■ 的為不鏽鋼。
Material: Steel, the product with ■ mark is available in stainless steel.

型號 MODEL	夾持力 HOLDING CAPACITY(kgf)	自重 WEIGHT (g)
CH-40324	225	100
CH-40334	450	290
CH-40344	900	660
CH-40324-SS	225	100
CH-40334-SS	450	290
CH-40344-SS	900	660

CH-40324 THRU CH-40344

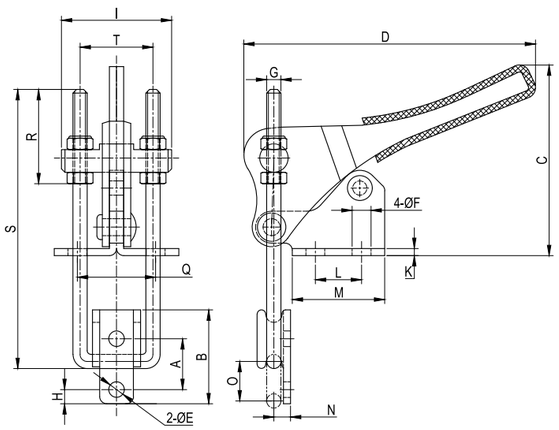

Unit:mm

型號 MODEL	A	B	C Max.	D Max.	ΦE	ΦF	G	H	I	K	L	M	N	O	Q	R	S	T
CH-40324	14.3	26.4	56	84	4.4	5.3	M4 P=0.7	4	31	2	13	26	4.7	11.1	22	26.5	78.5	20.5
CH-40334	20.6	38.1	67.5	127	7	7	M6 P=1	7	41.3	3	19.1	33.3	8.7	17.5	25.4	40.5	114	28
CH-40344	27	54	92.5	134	8.7	8.7	M8 P=1.25	9.5	60.3	4	31.8	47.6	12.7	28.6	36.5	58	154	44.5
CH-40324-SS	14.3	26.4	56	84	4.4	5.3	M4 P=0.7	4	31	2	13	26	4.7	11.1	22	26.5	78.5	20.5
CH-40334-SS	20.6	38.1	67.5	127	7	7	M6 P=1	7.1	41.3	3	19.1	33.3	8.7	17.5	25.4	40.5	114	28
CH-40344-SS	27	54	92.5	134	8.7	8.7	M8 P=1.25	9.5	60.3	4	31.8	47.6	12.7	28.6	36.5	58	154	44.5

CH-40334-SS-T001

材質：不鏽鋼。 Material: Stainless steel.

型號 MODEL	夾持力 HOLDING CAPACITY(kgf)	自重 WEIGHT (g)
CH-40334-SS-T001	450	310

CH-40334-SS-T001

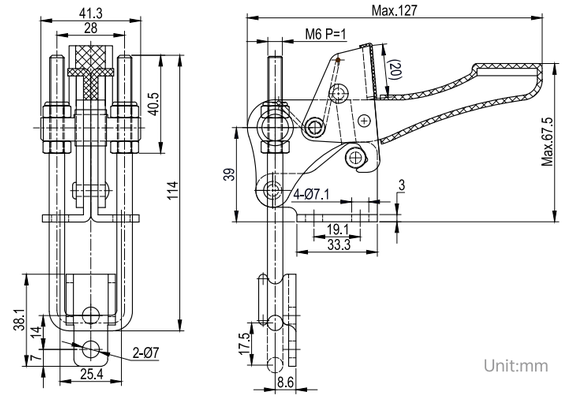

Unit:mm

CH-40702

■ CH-40702-SS

材質：低碳鋼，標註 ■ 的為不鏽鋼。
Material: Steel, the product with ■ mark is available in stainless steel.

型號 MODEL	夾持力 HOLDING CAPACITY(kgf)	自重 WEIGHT (g)
CH-40702	200	290
CH-40702-SS	200	290

CH-40702

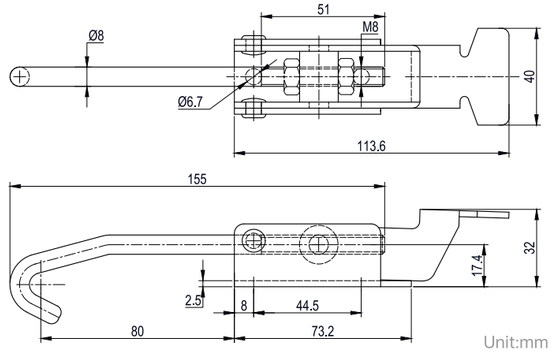

Unit:mm

CH-43101

CH-43102

材質：低碳鋼。 Material: Steel.

型號 MODEL	夾持力 HOLDING CAPACITY(kgf)	自重 WEIGHT (g)
CH-43101	170	310
CH-43102	500	530

CH-43101 THRU CH-43102

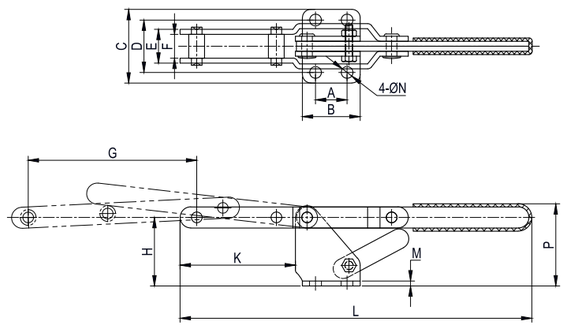

Unit:mm

型號 MODEL	A	B	C	D	E	F	G	H	K	N	M	L Max.	P Max.
CH-43101	19	34.8	44.4	31.6	20.4	14.4	101.6	41.3	69.5	7.1	3	215	52
CH-43102	31.8	48.4	64.3	45.2	20.3	14.3	84.9	48.6	76.7	8.5	3	244	62

CH-40820 CH-40840 CH-40870

材質：低碳鋼。 Material: Steel.

型號 MODEL	夾持力 HOLDING CAPACITY(kgf)	自重 WEIGHT (g)
CH-40820	200	120
CH-40840	250	306
CH-40870	700	700

* 兩個功能，垂直和水平方向都可鎖死。
Two function. Latch for vertical or horizontal are available.

CH-40820 THRU CH-40870

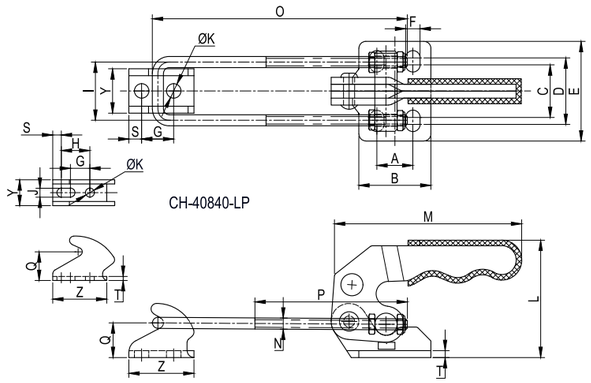

Unit:mm

型號 MODEL	A	B	C	D	E	F	G	H	I	J	K	L Max.	M Max.	N	O	P	Q	S	T	Z	Y
CH-40820	13	26	19	24	36	5.2	11.6	-	21	5.2	-	42.3	67	M4×0.7	92	51	12.5	4.6	2.5	23.5	16
CH-40840	19	35	25	32	48	6.5	14	20.6	28	6.4	6.5	63	104	M6×1.0	114.5	60	20.7	6.6	3	39	18.6
CH-40870	32	51	36	45	62	8.5	19	-	44.5	8.5	-	86.5	122	M8×1.25	154	60	24.2	8.05	4	40	28

● 法蘭座 FLANGED BASE ● 窄底座 NARROW BASE

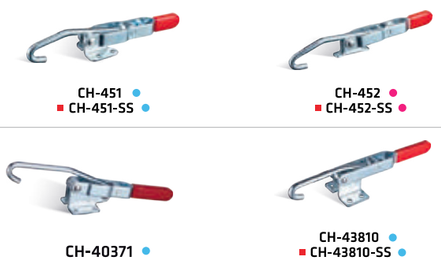

CH-451 ●
■ CH-451-SS ●

CH-452 ●
■ CH-452-SS ●

CH-40371 ●

CH-43810 ●
■ CH-43810-SS ●

型號 MODEL	夾持力 HOLDING CAPACITY(kgf)	自重 WEIGHT (g)
CH-451	170	270
CH-452	170	255
CH-40371	340	690
CH-43810	450	1130
CH-451-SS	170	270
CH-452-SS	170	255
CH-43810-SS	450	1130

材質：低碳鋼，標註 ■ 的為不鏽鋼。
Material: Steel, the product with ■ mark is available in stainless steel.

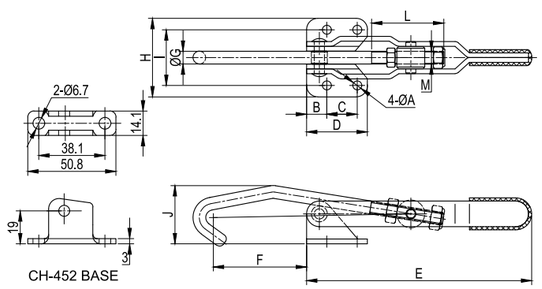

Unit:mm

型號 MODEL	A	B	C	D	E Max.	F	G	H	I	J	L	M
CH-451	5.6	12.7	19	38.1	143	57.4	8	49.2	34.9	36.5	46	M8
CH-452	6.7	-	38.1	50.8	157	43.8	8	-	-	36.5	46	M8
CH-40371	8.7	7.9	31.8	47.6	195	79.4	9.5	65.5	49.1	57.3	57.5	3/8-16
CH-43810	10.3	12.7	28.6	54	245	76.2	12.7	85.7	60.3	66.7	74	1/2-12
CH-451-SS	5.6	12.7	19	38.1	143	57.4	8	49.2	34.9	36.5	46	M8
CH-452-SS	6.7	-	38.1	50.8	157	43.8	8	-	-	36.5	46	M8
CH-43810-SS	10.3	12.7	28.6	54	245	76.2	12.7	85.7	60.3	66.7	74	1/2-12

CH-40200

材質：低碳鋼。 Material: Steel.

型號 MODEL	夾持力 HOLDING CAPACITY(kgf)	自重 WEIGHT (g)
CH-40200	200	155

CH-40200

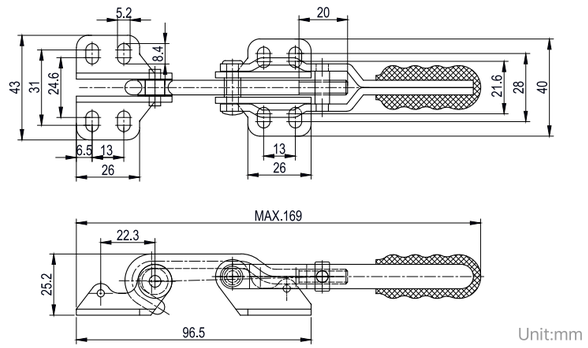

Unit:mm

CH-D346 CH-D347 CH-D348 CH-D349

材質：低碳鋼。 Material: Steel.

型號 MODEL	夾持力 HOLDING CAPACITY(kgf)	自重 WEIGHT (g)
CH-D346	235	170
CH-D347	235	165
CH-D348	750	550
CH-D349	900	650

CH-D346 CH-D347 CH-D348 CH-D349

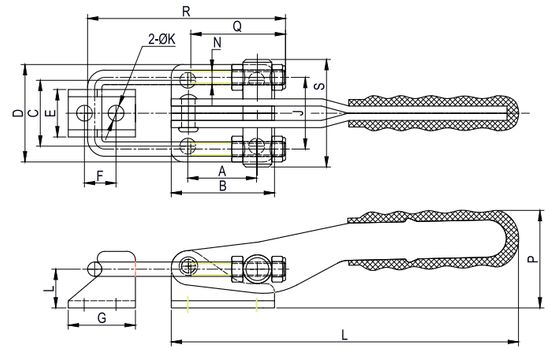

Unit:mm

型號 MODEL	A	B	C	D	E	F	G	H	I	J	K	M	N	Q	R	S	L Max.	P Max.
CH-D346	24	36	23	34	16.5	11	23.4	2.5	13.5	25	5.5	5.5	M5	33	70	37.5	118	52
CH-D347	24	36	23	34	16.5	11	23.4	2.5	13.5	25	5.5	5.5	M5	33	70	37.5	121	34
CH-D348	30	46	24	40.8	19.3	14	28	3	18.2	32	5.5	5.5	M6	48	90	45	138	36.5
CH-D349	40	60	36	56	25.5	19.1	38	4	23.1	40	6.8	7	M8	55	120	58	184	52

CH-40360-ST CH-40370-LP

材質：CH-40360-ST為低碳鋼，底座和手柄為鍛造合金鋼；CH-40370-LP為鑄鋼。
Material: CH-40360-ST is available in steel, the base and handle is made by forged alloy steel; CH-40370-LP is available in cast steel.

型號 MODEL	夾持力 HOLDING CAPACITY(kgf)	自重 WEIGHT (g)	可搭配固定座 OPTIONAL LATCH PLATE
CH-40360-ST	3400	1610	CH-40370-LP
CH-40370-LP	-	474	-

CH-40360-ST AND CH-40370-LP

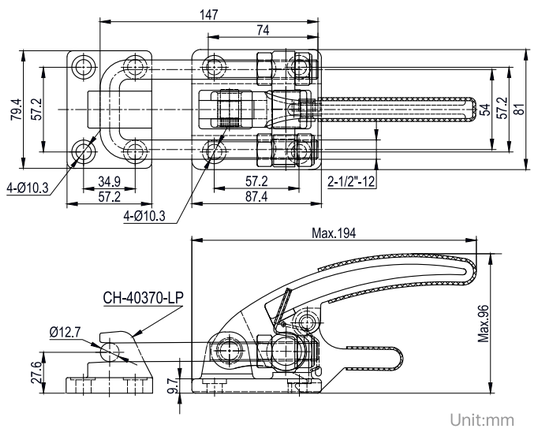

Unit:mm

CH-40370 + CH-40370-LP

CH-40380
■ CH-40380-SS + CH-40370-LP

型號 MODEL	夾持力 HOLDING CAPACITY(kgf)	自重 WEIGHT (g)	可搭配固定座 OPTIONAL LATCH PLATE
CH-40370	1818	1330	CH-40370-LP
CH-40380	3400	1590	CH-40370-LP
CH-40380-SS	3400	1590	CH-40370-LP

材質：低碳鋼，CH-40380-SS為不鏽鋼，底座和手柄為鍛造合金鋼。
Material :Steel, CH-40380-SS is available in stainless steel,
the base and handle is made by forged alloy steel.

CH-40370 AND CH-40370-LP

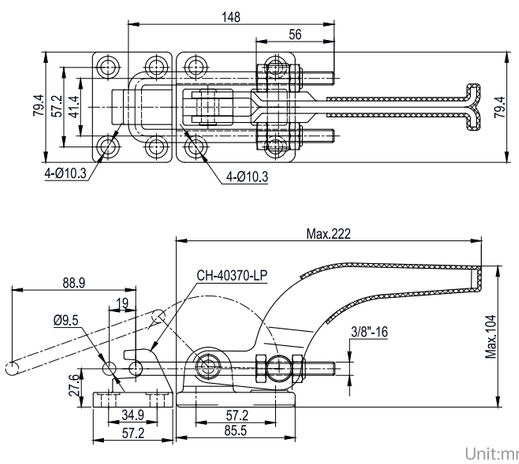

Unit:mm

CH-40380(SS) AND CH-40370-LP

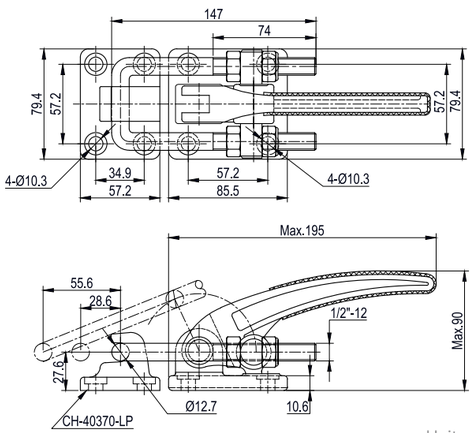

Unit:mm

CH-40550

CH-40580

材質：低碳鋼。 Material: Steel.

型號 MODEL	夾持力 HOLDING CAPACITY(kgf)	自重 WEIGHT (g)
CH-40550	100	200
CH-40580	220	940

CH-40550 AND CH-40580

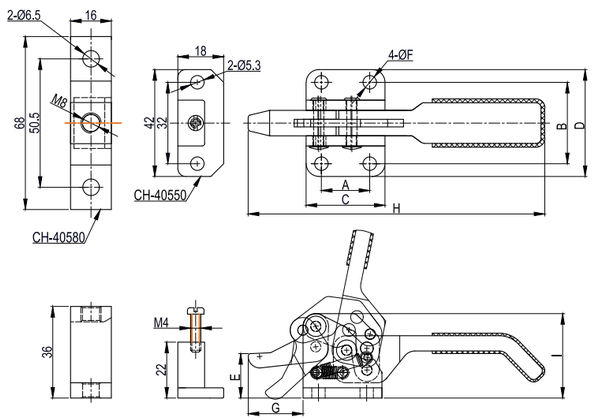

Unit:mm

型號 MODEL	A	B	C	D	E	F	G	H Max.	I
CH-40550	19	32	31	42	17.5	6.5	21.6	120	33
CH-40580	35	51	62	68	25	8.5	40	222	50.5

CH-43110

CH-43120

材質：低碳鋼。 Material: Steel.

型號 MODEL	夾持力 HOLDING CAPACITY(kgf)	自重 WEIGHT (g)
CH-43110	170	180
CH-43120	170	180

* CH-43110 Supplied with M6 P=1.0 hook bolt.
* CH-43120 Supplied with CH-SA-065010 hex head spindle assembly.

CH-43110 AND CH-43120

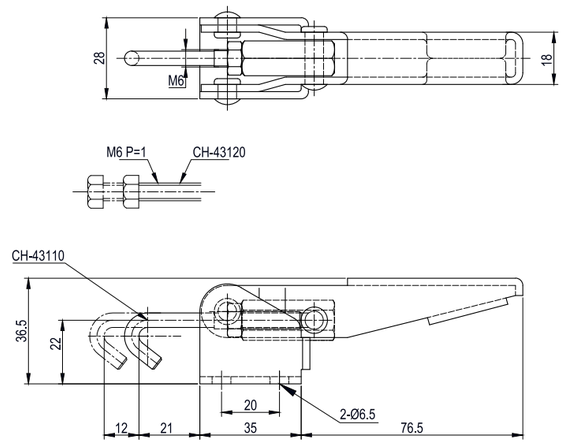

CH-43150

CH-43160

材質：低碳鋼。 Material: Steel.

型號 MODEL	夾持力 HOLDING CAPACITY(kgf)	自重 WEIGHT (g)
CH-43150	300	385
CH-43160	300	385

* CH-43150 Supplied with M10 P=1.5 hook bolt.
* CH-43160 Supplied with CH-SA-107515 hex head spindle assembly.

CH-43150 AND CH-43160

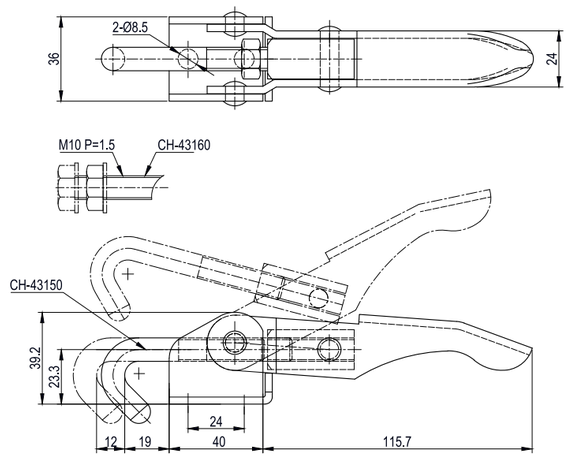

CH-50350

CH-50350-1

CH-50360

CH-50380

CH-50385

CH-50450

材質：鍛鋼。 Material: Forged steel.

型號 MODEL	夾持力 HOLDING CAPACITY(kgf)	自重 WEIGHT (g)	壓頭螺絲型號 SPINDLE SUPPLIED
CH-50350	80	179	CH-SA-14112
CH-50350-1	90	185	CH-SA-14112
CH-50360	159	290	CH-SA-56200
CH-50380	318	660	CH-SF-38300
CH-50385	820	710	CH-SA-38114
CH-50450	318	740	CH-SF-38300 & CH-SA-38300

CH-50350

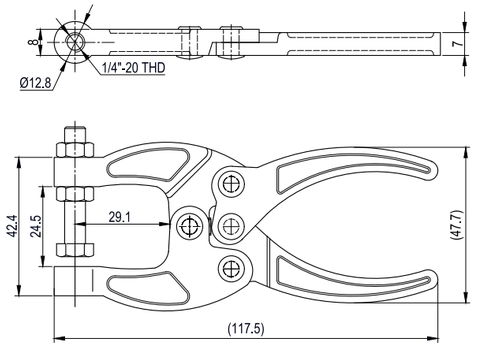

Unit:mm

CH-50350-1

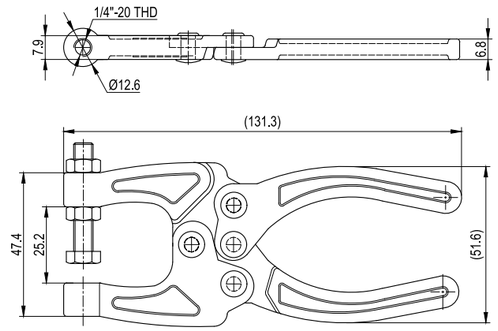

Unit:mm

CH-50360

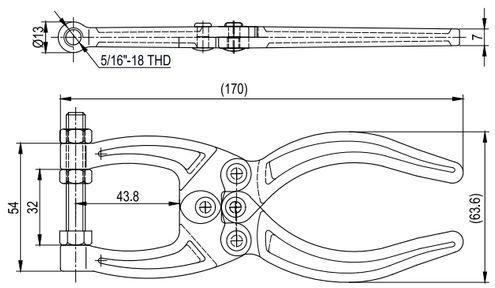

Unit:mm

CH-50380

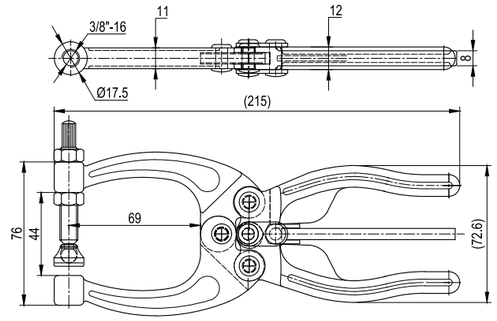

Unit:mm

CH-50385

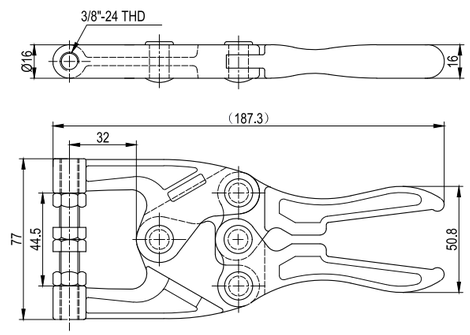

Unit:mm

CH-50450

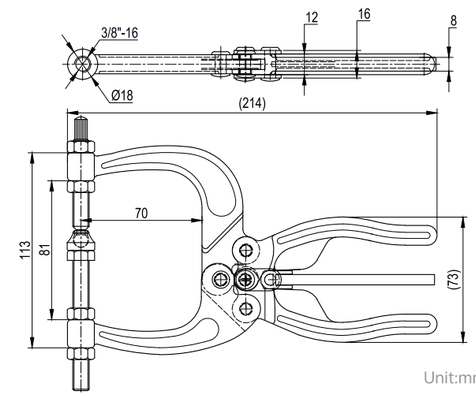

Unit:mm

CH-50480

CH-51000

材質：鍛鋼。 Material: Forged steel.

CH-51010

CH-51020

CH-51030

材質：低碳鋼。 Material: Steel.

型號 MODEL	夾持力 HOLDING CAPACITY(kgf)	自重 WEIGHT (g)	壓頭螺絲型號 SPINDLE SUPPLIED	壓把開啟角度 BAR OPENS
CH-50480	500	600	-	22°
CH-51000	200	255	-	22°
CH-51010	250	475	CH-SA-56112	45°
CH-51020	300	740	-	40°
CH-51030	260	840	-	42°

CH-50480

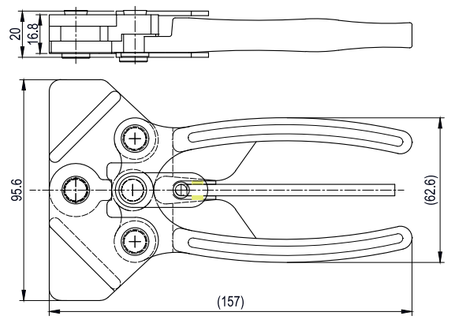

Unit:mm

CH-51000

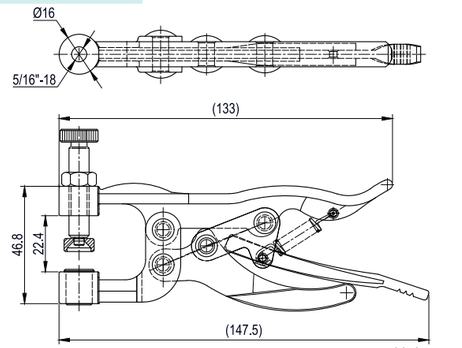

Unit:mm

CH-51010

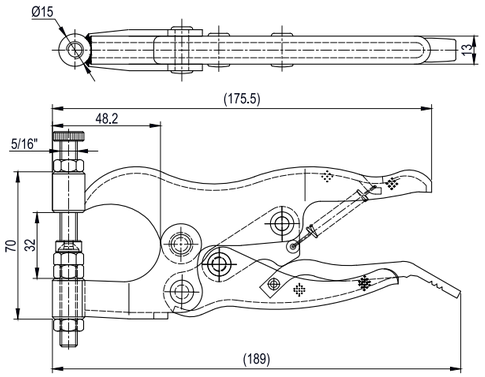

Unit:mm

CH-51020

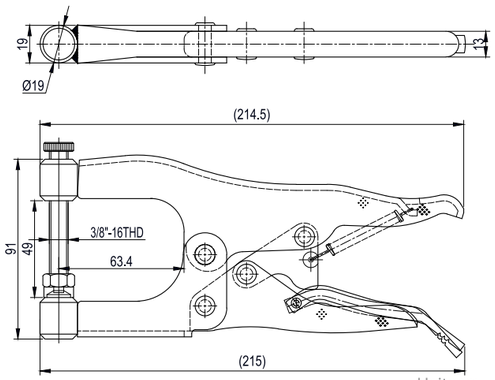

Unit:mm

CH-51030

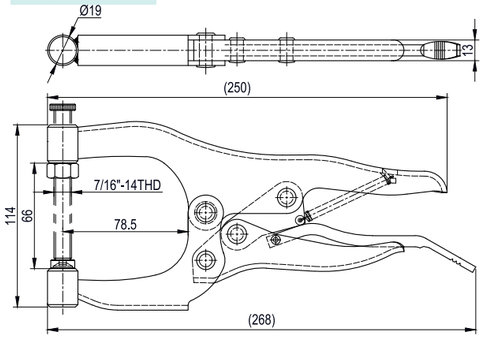

Unit:mm

CH-51151

CH-51100

CH-51106

CH-51108

CH-51109

型號 MODEL	夾持力 HOLDING CAPACITY(kgf)	自重 WEIGHT (g)
CH-51151	580	520
CH-51100	350	850
CH-51106	102	190
CH-51108	454	698
CH-51109	227	844

CH-51151

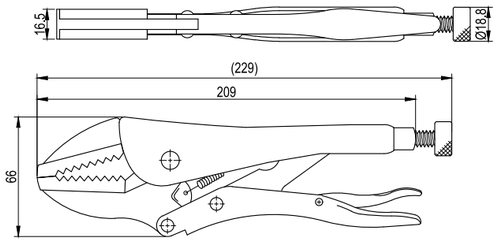

Unit:mm

CH-51100

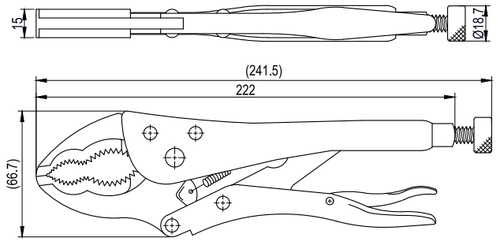

Unit:mm

CH-51106

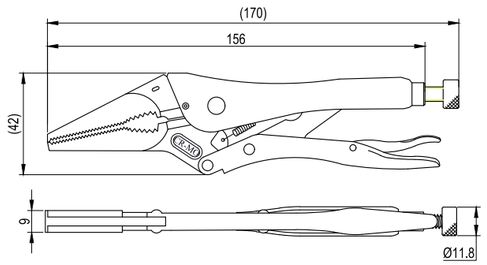

Unit:mm

CH-51108

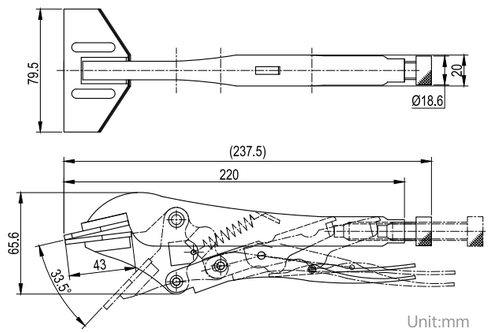

Unit:mm

CH-51109

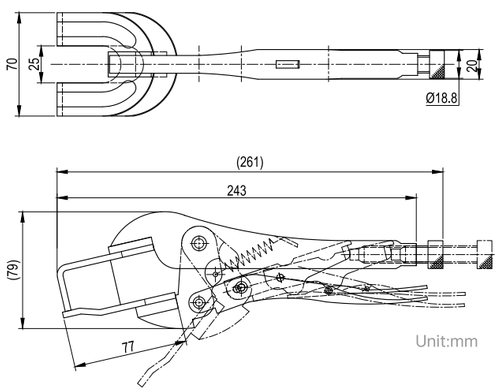

Unit:mm

CH-51105

CH-51150

CH-51152

Unit:mm

型號 MODEL	A	B	C	D	ΦE	F
CH-51105	143	130	41.8	9	11.8	2
CH-51150	190	176	53.5	11	16.5	2
CH-51152	225	207	66	11	18.7	2

型號 MODEL	夾持力 HOLDING CAPACITY(kgf)	自重 WEIGHT (g)
CH-51105	102	180
CH-51150	350	340
CH-51152	600	520

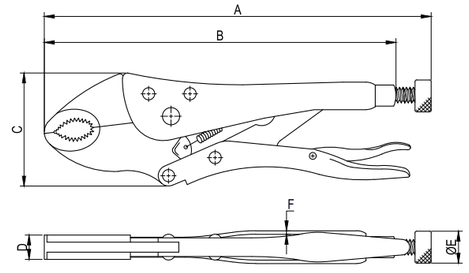

CH-511SP

CH-51111

型號 MODEL	夾持力 HOLDING CAPACITY(kgf)	自重 WEIGHT (g)
CH-511SP	350	850
CH-51111	350	850

CH-511SP

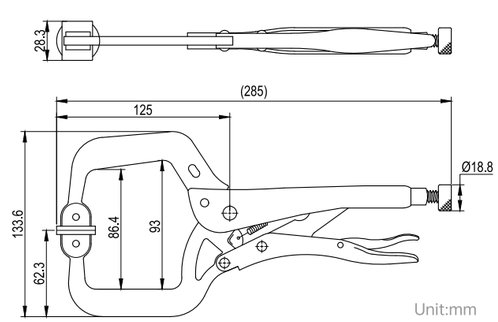

Unit:mm

CH-51111

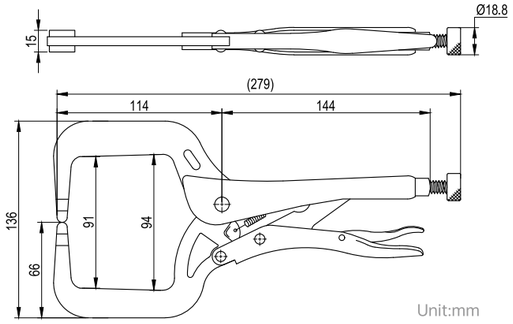

Unit:mm

CH-60130

CH-60131

材質：低碳鋼。 Material: Steel.

型號 MODEL	夾持力 HOLDING CAPACITY(kgf)	自重 WEIGHT (g)	壓頭螺絲型號 SPINDLE SUPPLIED	壓把開啟角度 BAR OPENS	手柄開啟角度 HANDLE OPENS
CH-60130	250	680	CH-SF-38300	70°	165°
CH-60131	350	1590	CH-SF-12400	85°	170°

CH-60130 AND CH-60131

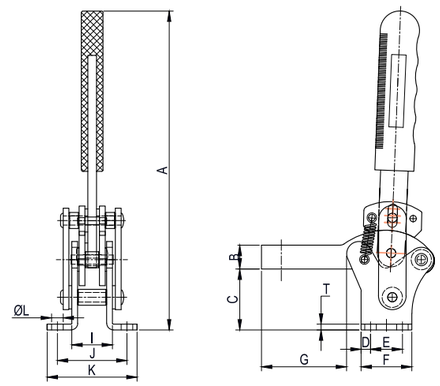

Unit:mm

型號 MODEL	A Max.	B	C Min.	D	E	F	G	H	I	J	K	ΦL	T
CH-60130	222	19.5	39.4	6.5	22	35	58	118.9	20	48	62	8.5	4
CH-60131	252	22	60.3	9	30	48	111	180.5	25	57	77	9	4.5

CH-70305 CH-70310 CH-70315 CH-70505

CH-70510 CH-70515 CH-70605 CH-70610 CH-70615

材質：鍛造合金鋼。 Material: Forged alloy steel.

型號 MODEL	夾持力 HOLDING CAPACITY(kgf)	自重 WEIGHT (g)	壓把開啟角度 BAR OPENS	手柄開啟角度 HANDLE OPENS
CH-70305	500	790	214°	134°
CH-70310	500	850	214°	134°
CH-70315	500	940	214°	134°
CH-70505	1000	1355	206°	130°
CH-70510	1000	1490	206°	130°
CH-70515	1000	1590	206°	130°
CH-70605	2000	2550	206°	130°
CH-70610	2000	2870	206°	130°
CH-70615	2000	2990	206°	130°

CH-70305 THRU CH-70615

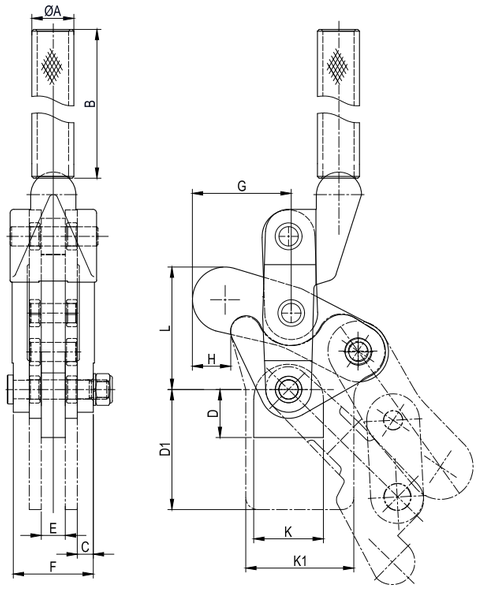

Unit:mm

型號 MODEL	ΦA	B	C	D	D1	E	F	G	H	K	K1	L
CH-70305	17.5	125	6.7	-	-	10	32.4	40	16	-	-	51
CH-70310	17.5	125	6.7	20	-	10	32.4	40	16	29	-	51
CH-70315	17.5	125	6.7	-	50	10	32.4	40	16	-	45	51
CH-70505	21.5	125	9.35	-	-	12.3	41	57	26	-	-	73
CH-70510	21.5	125	9.35	28	-	12.3	41	57	26	38.5	-	73
CH-70515	21.5	125	9.35	-	63.5	12.3	41	57	26	-	51	73
CH-70605	27	125	10.3	-	-	16	48.6	74.3	33	-	-	91
CH-70610	27	125	10.3	33	-	16	48.6	74.3	33	51	-	91
CH-70615	27	125	10.3	-	76	16	48.6	74.3	33	-	63.5	91

CH-75027M CH-75027M-SM

材質：鑄鋼。 Material: Cast steel.

型號 MODEL	夾持力 HOLDING CAPACITY(kgf)	自重 WEIGHT (g)	壓把開啟角度 BAR OPENS	手柄開啟角度 HANDLE OPENS
CH-75027M	340	1350	195°±2°	65°±2°
CH-75027M-SM	340	1350	195°±2°	65°±2°

CH-75027M

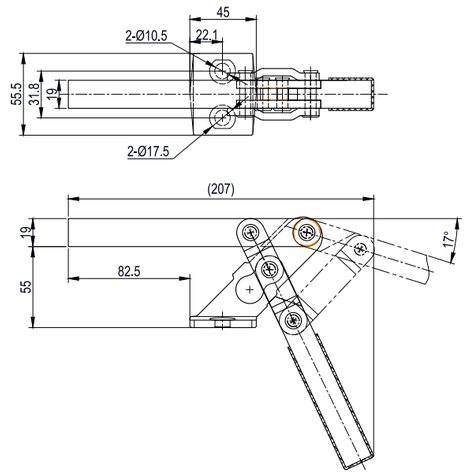

CH-75027M-SM

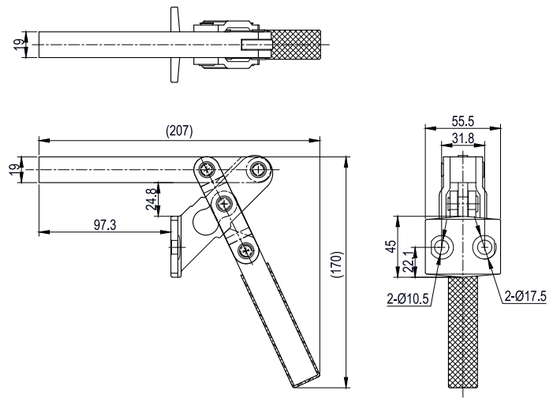

CH-75048 CH-75078 CH-75088

材質：低碳鋼。 Material: Steel.

型號 MODEL	夾持力 HOLDING CAPACITY(kgf)	自重 WEIGHT (g)	壓把開啟角度 BAR OPENS	手柄開啟角度 HANDLE OPENS
CH-75048	700	2700	190°	125°
CH-75078	1600	4300	185°	120°
CH-75088	2500	6350	185°	120°

CH-75048 THRU CH-75088

Unit:mm

型號 MODEL	A	B	C	D	E	F	G
CH-75048	82.5	67.3	109	25.4	264.5	56	19
CH-75078	101.5	69.5	118.5	32	272	66	22
CH-75088	127	82.5	124.5	38	323	70.4	25.4

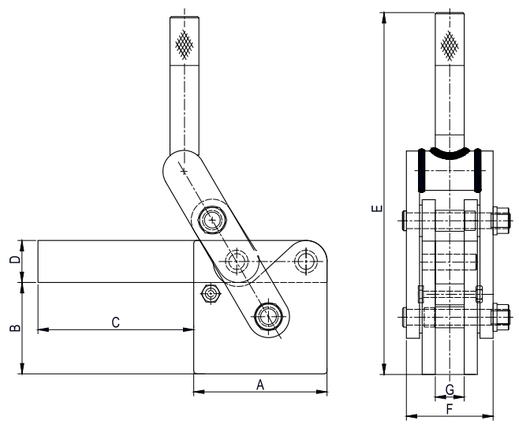

CH-70320

CH-70300T

CH-70300B

CH-70710

CH-70715

CH-70720

CH-70725

CH-71210

CH-71215

CH-71220

CH-71225

CH-72410

CH-72415

CH-72420

CH-72425

材質：鍛造合金鋼和低碳鋼。 Material: Forged alloy steel and steel.

型號 MODEL	夾持力 HOLDING CAPACITY(kgf)	自重 WEIGHT (g)	壓把開啟角度 BAR OPENS	手柄開啟角度 HANDLE OPENS
CH-70320	300	290	202°	125°
CH-70300T	300	250	194°	123°
CH-70300B	300	310	34°~130°	45°~92°
CH-70710	700	700	205°	130°
CH-70715	700	800	205°	130°
CH-70720	700	1180	205°	130°
CH-70725	700	1250	180°	120°
CH-71210	1200	1720	195°	130°
CH-71215	1200	1880	195°	130°
CH-71220	1200	1930	195°	130°
CH-71225	1200	2110	180°	125°
CH-72410	2400	2900	195°	130°
CH-72415	2400	3200	195°	130°
CH-72420	2400	3750	195°	130°
CH-72425	2400	4100	195°	130°

CH-70320 / CH-70300B

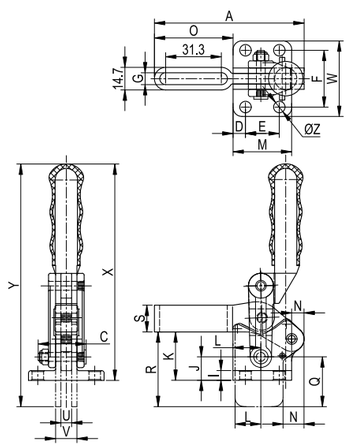

CH-70710 / CH-71210 / CH-72410
CH-70715 / CH-71215 / CH-72415

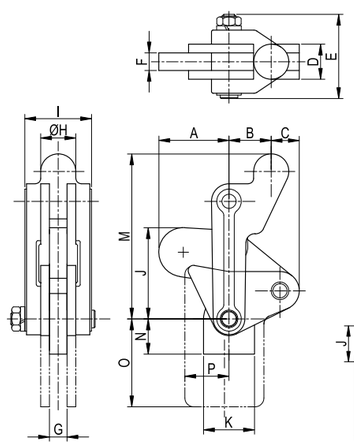

CH-70720 / CH-71220 / CH-72420
CH-70725 / CH-71225 / CH-72425

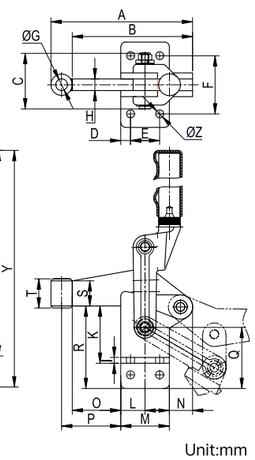

Unit:mm

型號 MODEL	A	B	C	D	E	F	G	H	I	J	K	L	M	N	O	P	Q	R	S	T	U	V	W	X	Y	Z
CH-70320	84	-	27	-	-	-	6.7	-	-	-	-	14.5	27	12	45.5	-	28	42	15	-	6	12	-	-	136	-
CH-70300T	29	14	10	12	27	6	6	16	20	32	-	27	106	-	28	15	-	-	-	-	-	-	-	-	-	-
CH-70300B	84	-	27	7	19	32	6.7	-	5.5	13	27.2	15.65	33	7	44.2	-	-	-	15	-	-	-	42.5	121.7	-	6.5
CH-70710	40	24	16	20	48	10	10	20	38	52	29	-	94	20	-	-	-	-	-	-	-	-	-	-	-	-
CH-70715	40	24	16	20	48	10	10	20	38	52	-	45	94	-	50	25	-	-	-	-	-	-	-	-	-	-
CH-70720	-	105	48	10	25	-	-	10	5	-	-	25	45	20	40	-	50	70	22	-	10	20	-	-	240.6	8.3
CH-70725	127	105	48	10	25	50	12.2	10	5	28.8	48.5	25	45	20	40	51	-	-	22	30	-	-	67	219	-	8.3
CH-71210	51	25	24	24	56	12	12	22	43.8	81	38	-	113	28	-	-	-	-	-	-	-	-	-	-	-	-
CH-71215	51	25	24	24	56	12	12	22	43.8	81	-	50	113	-	63	25	-	-	-	-	-	-	-	-	-	-
CH-71220	-	124	56	10	30	-	12.2	12	6	-	-	25	50	24	50	-	63	85	26	-	12	24	-	-	278	8.3
CH-71225	146	124	56	10	30	60	12.2	12	6	37	59	25	50	24	50	61	-	-	26	30	-	-	88	252.4	-	8.3
CH-72410	72	32	26	32	66	16	16	30	53	91	52	-	144	33	-	-	-	-	-	-	-	-	-	-	-	-
CH-72415	72	32	26	32	66	16	16	30	53	91	-	63	144	-	78.5	40	-	-	-	-	-	-	-	-	-	-
CH-72420	-	158	66	12	40	-	-	16	-	-	-	40	63	35	60	-	78.5	107.5	-	-	16	32	-	-	320	-
CH-72425	188	158	66	12	40	75	16.3	16	8	46	75	40	63	35	60	75	-	-	32	38	-	-	105	295	-	10.3

CH-70200A

CH-70200B

CH-70730A

CH-70730B

CH-71230A

CH-71230B

CH-72430A

CH-72430B

材質：鍛造合金鋼和低碳鋼。 Material: Forged alloy steel and steel.

型號 MODEL	夾持力 HOLDING CAPACITY(kgf)	自重 WEIGHT (g)	壓把開啟角度 BAR OPENS	手柄開啟角度 HANDLE OPENS
CH-70200A	250	300	200°	128°
CH-70200B	250	300	164°	128°
CH-70730A	700	1280	200°	128°
CH-70730B	700	1280	164°	128°
CH-71230A	1200	2120	200°	128°
CH-71230B	1200	2120	164°	128°
CH-72430A	2400	3780	200°	128°
CH-72430B	2400	3780	164°	128°

CH-70200A / CH-70730A / CH-71230A / CH-72430A

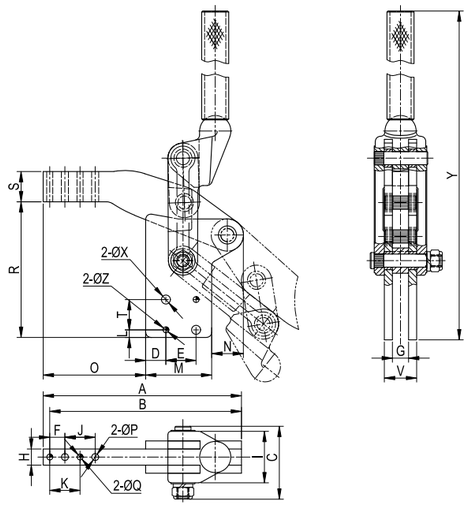

CH-70200B / CH-70730B / CH-71230B / CH-72430B

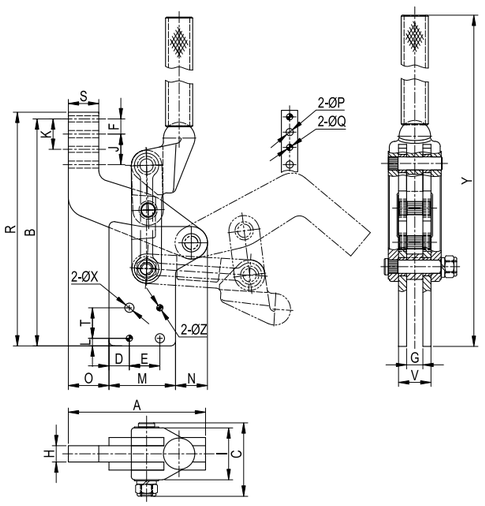

Unit:mm

型號 MODEL	A	B	C	D	E	F	G	H	I	J	K	L	M	N	O	P	Q	R	S	T	V	ΦX	Y	Z
CH-70200A	90.2	84	27	5.9	15	7.5	6	15	20	15	15	5	26.8	8.1	55.3	5.5	4	45	15	15	12	5.5	156.7	4
CH-70200B	53	95.1	27	5.9	15	7.5	6	15	20	15	15	5	26.8	8.1	18.1	5.5	4	101.3	15	15	12	5.5	156.7	4
CH-70730A	141	133	48	10.5	24	15	10	15	35	30	30	10	45	20	75.7	7	6	79	20	19	20	9	242	6
CH-70730B	81	158	48	10.5	24	15	10	15	35	30	30	10	45	20	15.7	7	6	166	20	19	20	9	242	6
CH-71230A	172.5	164.5	55	11.3	30	15	12	15	43.8	30	30	8	52.8	23	96.7	7	6	104	30	30	24	9	277.5	6
CH-71230B	109.5	196	55	11.3	30	15	12	15	43.8	30	30	8	52.8	23	33.7	7	6	203.5	30	30	24	9	277.5	6
CH-72430A	198.5	192	67.5	20	30	15	16	16	52	30	30	7.5	65.5	31.5	101.5	7	6	134.5	30	30	32	9	343	6
CH-72430B	137	223.5	67.5	20	30	15	16	16	52	30	30	7.5	65.5	31.5	40	7	6	230	30	30	32	9	343	6

CH-702-C CH-70201 CH-702-D CH-70203 CH-702-K

CH-701-C CH-70101 CH-701-D CH-70103 CH-701-K

材質：鍛造合金鋼和低碳鋼。 Material: Forged alloy steel and steel.

型號 MODEL	夾持力 HOLDING CAPACITY(kgf)	自重 WEIGHT (g)	壓把開啟角度 BAR OPENS	手柄開啟角度 HANDLE OPENS
CH-702-C	200	680	194°	123°
CH-70201	200	680	194°	123°
CH-702-D	500	1560	191°	122°
CH-70203	500	1480	191°	122°
CH-702-K	1000	2550	197°	128°
CH-701-C	200	740	194°	123°
CH-70101	200	700	194°	123°
CH-701-D	500	1680	191°	122°
CH-70103	500	1590	191°	122°
CH-701-K	1000	2650	197°	128°

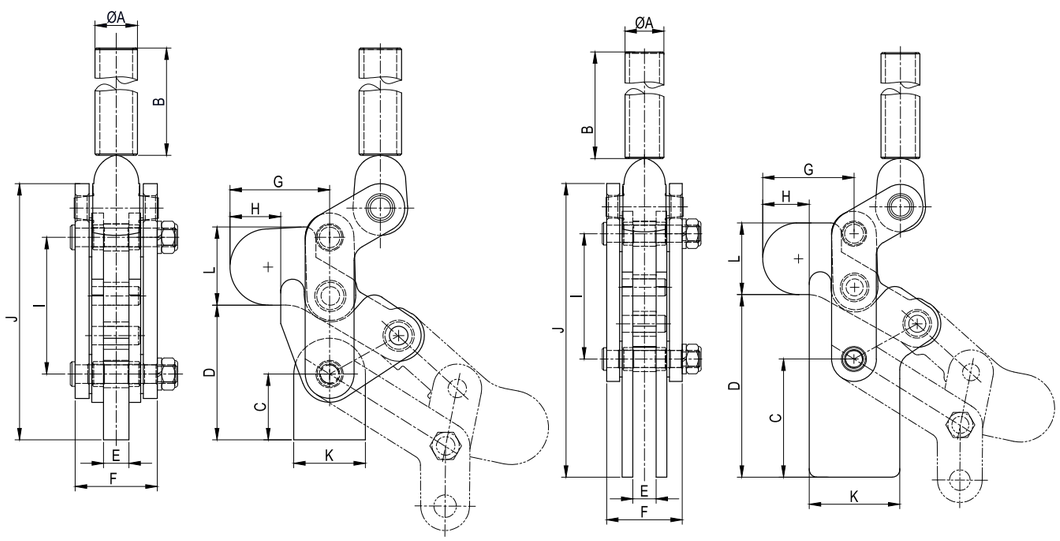

Unit:mm

型號 MODEL	A	B	C	D	E	F	G	H	I	J	K	L
CH-702-C	17.3	152.4	23.5	48	8	31.8	40.6	17	51	93	26	28
CH-70201	17.3	152.4	23.5	48	8	31.8	40.6	17	51	93	26	28
CH-702-D	21.7	152.4	33.4	69	13	42	51	26	70	132	36.7	39
CH-70203	21.7	152.4	33.4	71	13	42	51	26	70	132	36.7	39
CH-702-K	27.2	152.4	37.2	80.3	16	46	57.7	26.7	90	161	50	50.5
CH-701-C	17.3	152.4	50.3	75	8	31	40.6	17	51	121	44.8	28
CH-70101	17.3	152.4	50.3	75	8	31	40.6	17	51	121	44.5	28
CH-701-D	21.7	152.4	65.8	102	13	42	51	26	70	165	50.5	39
CH-70103	21.7	152.4	65.8	102	13	42	51	26	70	165	50.5	39
CH-701-K	27.2	152.4	78.5	122	16	46	57.7	23.3	90	202	63	50.5

CH-10101-A

CH-12050-A

CH-12050-UA

CH-12130-A

CH-12132-A

CH-12265-A

CH-12275-A

CH-10247-A

CH-10249-A

CH-20820-A

CH-20830-A

CH-20840-A

型號 MODEL	最大夾持力 MAXIMUM HOLDING CAPACITY(kgf)	自重 WEIGHT (g)	壓把打開角度 BAR OPENS	螺紋尺寸 PORT SIZE	氣缸內徑 CYLINDER INSIDE DIAMETER(mm)	氣缸面積 CYLINDER AREA(cm2)	氣缸最大壓力 MAXIMUM CYLINDER AIR PRESSURE(kg/cm2)(PSI)	
CH-10101-A	50	280	99°±2°	G1/8″	20	3.14	10	140
CH-12050-A	91	620	100°±2°	G1/8″	32	7.07	10	140
CH-12050-UA	91	620	100°±2°	G1/8″	32	7.07	10	140
CH-12130-A	227	900	100°±2°	G1/8″	32	7.07	10	140
CH-12132-A	227	900	100°±2°	G1/8″	32	7.07	10	140
CH-12265-A	340	1640	99°±2°	G1/8″	40	12.56	10	140
CH-12275-A	340	1800	99°±2°	G1/8″	40	12.56	10	140
CH-10247-A	450	3620	94°±2°	G1/8″	50	19.625	10	140
CH-10249-A	450	3640	94°±2°	G1/8″	50	19.625	10	140
CH-20820-A	100	1000	80°±2°	G1/8″	32	7.07	10	140
CH-20830-A	340	2060	79°±2°	G1/8″	40	12.56	10	140
CH-20840-A	1000	6550	91°±2°	G3/8″	63	31	10	140

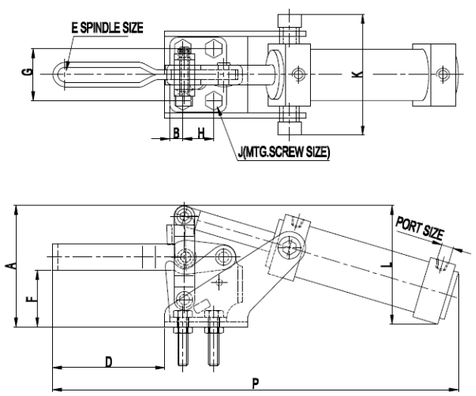

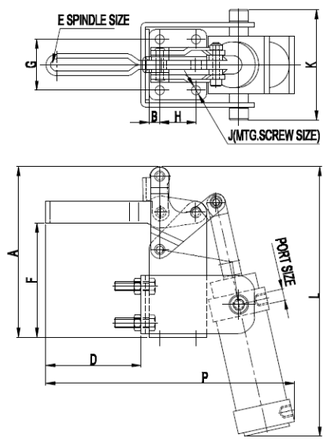

Unit:mm

型號 MODEL	P	A	B	D	E	F	G	H	J	K	L
CH-10101-A	172.8	46	4.7	26	CH-FC-10138	20	23.8	15.9	4.4	50	55
CH-12050-A	182.7	60	6.35	33	CH-FC-14134	25.5	27	12.7	5.2	69	51
CH-12050-UA	182.7	60	6.35	33	CH-FC-14134	25.5	27	12.7	5.2	69	51
CH-12130-A	249	74	11	68.8	CH-FC-56212	34.7	31.8	19	7	74	73
CH-12132-A	272	74	11	92.6	CH-FC-56212	34.7	31.8	19	7	74	73
CH-12265-A	307	97	8.7	93	CH-FC-38312	47	45.3	31.8	8.7	93	92
CH-12275-A	320.4	97	8.7	93	CH-FC-38312	47	45.3	31.8	8.7	93	92
CH-10247-A	408	111.3	9.8	124.5	CH-SA-12300	55	45.2	31.8	8.7	112	104
CH-10249-A	408	111.3	9.8	125.7	CH-SA-12300	55	45.2	31.8	8.7	112	104
CH-20820-A	168	109.5	15	61	CH-FC-56212	70	25	16	6.7	70	195
CH-20830-A	216.6	148.4	9.25	82.9	CH-FC-38312	99.3	44.4	31.8	8.3	96	234.5
CH-20840-A	380	167	21.5	119	-	107	41.5	57	10.3	124	134

CH-36301-A

CH-36003M-A

CH-36330M-A

CH-305-EM-A

型號 MODEL	最大夾持力 MAXIMUM HOLDING CAPACITY(kgf)	自重 WEIGHT (g)	螺紋尺寸 PORT SIZE	氣缸內徑 CYLINDER INSIDE DIAMETER(mm)	氣缸面積 CYLINDER AREA(cm2)	氣缸最大壓力 MAXIMUM CYLINDER AIR PRESSURE(kg/cm2)(PSI)	
CH-36301-A	45	280	G1/8″	20	3.14	10	140
CH-36003M-A	272	960	G1/8″	32	7.07	10	140
CH-36330M-A	1136	2570	G1/8″	40	12.56	10	140
CH-305-EM-A	386	1540	G1/8″	32	12.56	10	140

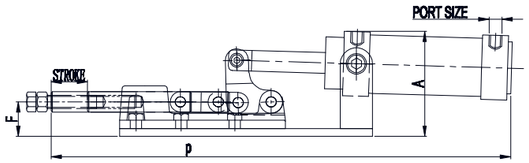

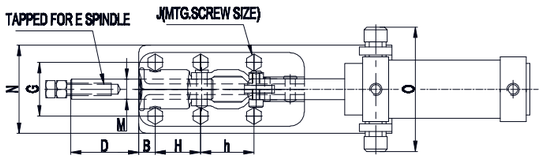

Unit:mm

型號 MODEL	P	A	B	D	E	F	G	H	h	J	M	N	O	行程 PLUNGER STROKE
CH-36301-A	187	41.5	7.4	33.2	CH-SA-042007	14.7	15.9	15.9	-	4.4	6.4	34	51	7.5
CH-36003M-A	262	67	10.8	57.5	CH-SA-085012	27.6	33.3	36.5	-	5.6	10.9	57.5	69.5	19.7
CH-36330M-A	354.5	84	12.7	52.5	CH-SA-105015	26.6	41.3	34.9	41.3	8.7	15.9	68	96	28
CH-305-EM-A	308	75.8	8.9	75.5	CH-SA-105015	37.8	41.1	41.1	-	8.3	15.9	57.2	72	23.6

CH-702-CA

CH-702-DA

CH-702-KA

型號 MODEL	最大夾持力 MAXIMUM HOLDING CAPACITY(kgf)	自重 WEIGHT (g)	壓把打開角度 BAR OPENS	螺紋尺寸 PORT SIZE	氣缸內徑 CYLINDER INSIDE DIAMETER(mm)	氣缸面積 CYLINDER AREA(cm2)	氣缸最大壓力 MAXIMUM CYLINDER AIR PRESSURE(kg/cm2)(PSI)	
CH-702-CA	200	1140	68°	G1/8″	32	7.07	10	140
CH-702-DA	500	3015	74°	G1/8″	40	12.56	10	140
CH-702-KA	1000	6250	80°	G3/8″	63	31	10	140

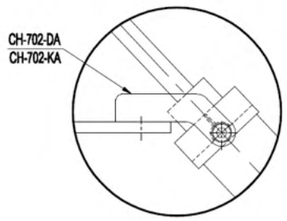

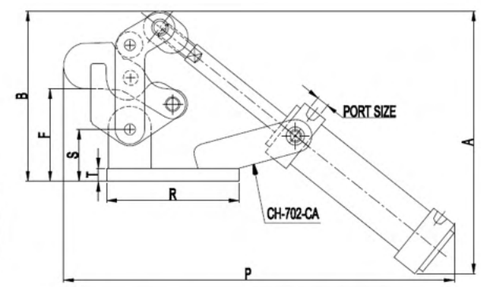

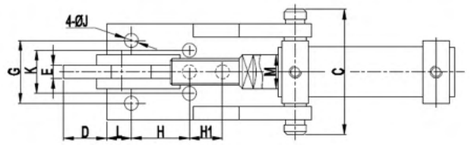

Unit:mm

型號 MODEL	P	A	B	C	D	E	F	J	M	G	H	H1	K	L	R	S	T
CH-702-CA	236	158	103	75.5	26	8	56.4	8.5	12	38	35	20	-	15	80	31.5	8
CH-702-DA	263	277	142	93	33	13	81	10.5	16	46	50	-	28	20	96	33.4	10
CH-702-KA	416	360	170.7	126.5	33	16	90.4	12.4	20	60	65	45	50	20	157	47.2	10

CH-30600HL-A CH-31200HL-A CH-32500HL-A

型號 MODEL	夾持力 HOLDING CAPACITY(kgf)	自重 WEIGHT (g)	壓頭螺絲型號 PORT SIZE	氣缸內徑 CYLINDER INSIDE DIAMETER(mm)	氣缸面積 CYLINDER AREA(cm2)	氣缸最大壓力 MAXIMUM CYLINDER AIR PRESSURE(kg/cm2)(PSI)	
CH-30600HL-A	600	1540	CH-SA-086512	32	7.07	10	140
CH-31200HL-A	1200	3900	CH-SA-107515	40	12.56	10	140
CH-32500HL-A	2500	7730	CH-SA-127517	40	12.56	10	140

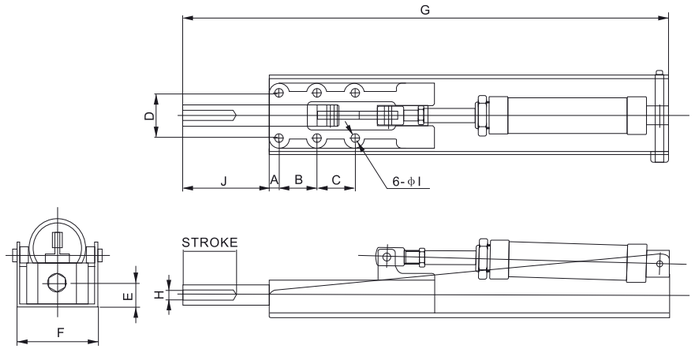

Unit:mm

型號 MODEL	A	B	C	D	E	F	G	H	I	J	行程 PLUNGER STROKE
CH-30600HL-A	25	36.5	-	33.6	14	57.5	326	M8 P=1.25	5.5	36	25
CH-31200HL-A	9	35	41	41	21	76	435	M10 P=1.5	8.5	53	32
CH-32500HL-A	12	45	45	54	26	97.2	575.7	M12 P=1.75	10.3	98.6	51

CH-30600PR-A CH-31200PR-A CH-32500PR-A

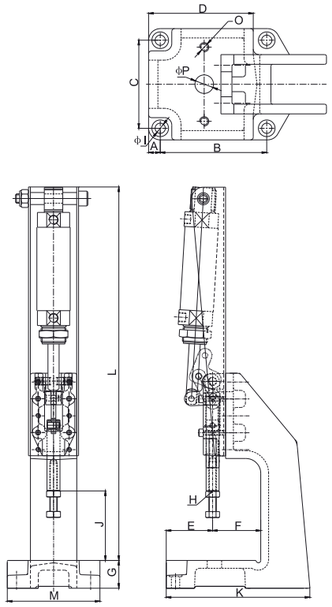

型號 MODEL	夾持力 HOLDING CAPACITY(kgf)	自重 WEIGHT (g)	壓頭螺絲型號 PORT SIZE	氣缸內徑 CYLINDER INSIDE DIAMETER(mm)	氣缸面積 CYLINDER AREA(cm2)	氣缸最大壓力 MAXIMUM CYLINDER AIR PRESSURE(kg/cm2)(PSI)	
CH-30600PR-A	600	4570	CH-SA-086512	32	7.07	10	140
CH-31200PR-A	1200	10890	CH-SA-107515	40	12.56	10	140
CH-32500PR-A	2500	22160	CH-SA-127517	40	12.56	10	140

Unit:mm

型號 MODEL	A	B	C	D	E	F	G	H	I	J	K	L	M	P	O	行程 PLUNGER STROKE
CH-30600PR-A	10	95	80	94	48	52	30	M8 P=1.25	9	75	150	403	100	15.6	M8*1.25	25
CH-31200PR-A	12.5	115	95	113	58.7	65	40	M10 P=1.5	11	100	203	534	120	20	M10*1.5	32
CH-32500PR-A	12.5	145	125	139	63	79	50	M12 P=1.75	11	120	238	697	150	30	M10*1.5	51

Shallow Throat C Clamps
淺喉式C型鉗

材質：鉻鉬合金鋼。 Material: Chrome-molybdenum alloy steel.

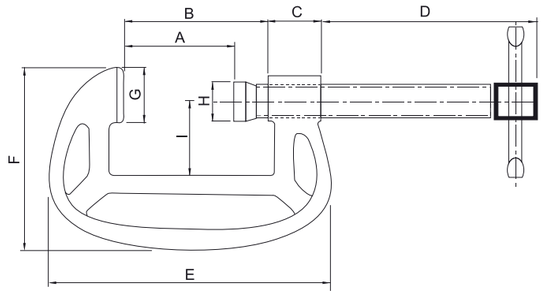

Unit:mm

型號 MODEL	夾持力 HOLDING CAPACITY(kgf)	自重 WEIGHT (g)	尺寸 SIZE
M25	1300	200	1″
M38	1500	290	1-1/2″
M50	2000	450	2″
M75	2800	1250	3″
M100	3000	1400	4″
M125	3300	2170	5″
M150	3600	3170	6″
M200	6000	4550	8″
M250	7000	6100	10″
M300	8000	9000	12″

型號 MODEL	A	B	C	D	E	F	G	H	I
M25	25.5	36	20	49	80	58	20	Φ16	24.5
M38	39	50	20	69	97	68	20	Φ16	31
M50	45.8	66	21.6	87.8	120	70.5	22.2	Φ15.8	31.3
M75	69.7	85.3	27	107.4	148.4	83.7	27.4	Φ19	40
M100	98.2	117.5	32.4	143	192.2	106	31.5	Φ22.2	51.5
M125	118.7	140	36.7	176.4	225	122.5	35.5	Φ25.5	60.8
M150	141.4	175	40	198.8	270	137.8	41.5	Φ25.5	72.3
M200	185.2	209.5	44	239.8	323	174.4	41.7	Φ28	96
M250	243.5	270	44.5	330	380	203	43	Φ28	124
M300	290	320	55	360	455	223	50	Φ35	130

Deep Throat C Clamps
深喉式C型鉗

材質：鉻鉬合金鋼。 Material: Chrome-molybdenum alloy steel.

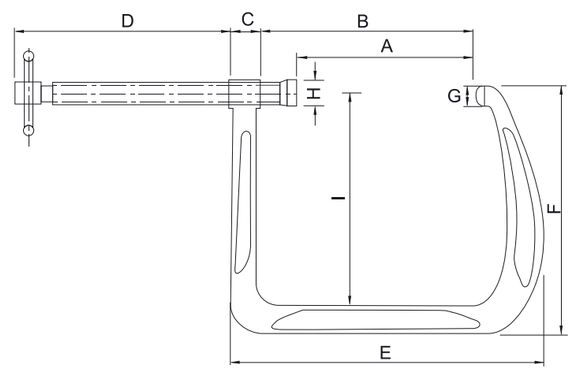

Unit:mm

型號 MODEL	自重 WEIGHT (g)	尺寸 SIZE
M50	320	2″
M75	1300	3″
M100	2050	4″
M150	3170	6″

型號 MODEL	A	B	C	D	E	F	G	H	I
M50	53	64.5	20.5	83	115	95	22.5	Φ16	59
M75	70	91.5	23.5	103	155	125	25	Φ22.2	80.5
M100	105	131.5	31	145	216	178	28	Φ25.5	117
M150	150	172	31	196	270	220	33	Φ30	160

CH-80070

材質：鑄鋼和低碳鋼。 Material: Cast steel and steel.

型號 MODEL	夾持力 HOLDING CAPACITY(kgf)	自重 WEIGHT (g)	行程 PLUNGER STROKE(mm)
CH-80070	200	1032	85

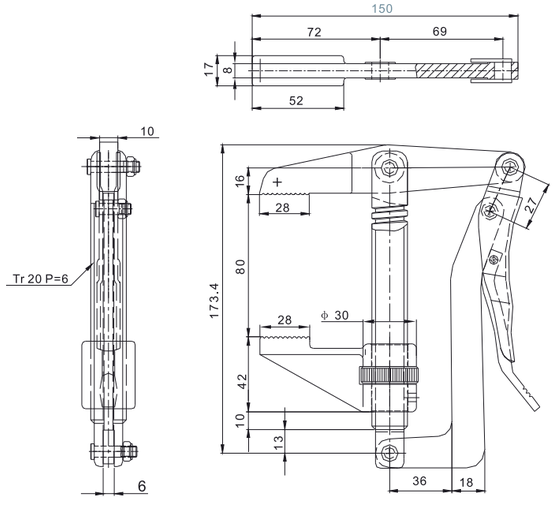

CH-80325
■ CH-80325-SS

CH-80379
■ CH-80379-SS

材質：低碳鋼，標註 ■ 的為不鏽鋼。
Material: Steel, the product with ■ mark is available in stainless steel.

型號 MODEL	夾持力 HOLDING CAPACITY(kgf)	自重 WEIGHT (g)	壓頭螺絲型號 SPINDLE SUPPLIED	開口開啟角度 JAW OPENS
CH-80325	340	500	CH-SA-12212	90°
CH-80379	340	500	CH-SA-12212	90°
CH-80325-SS	340	500	CH-SA-12212	90°
CH-80379-SS	340	500	CH-SA-12212	90°

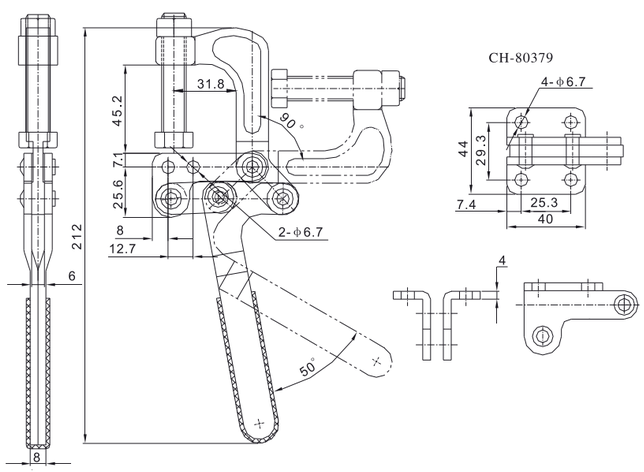

Features of F Clamp
F 型鉗特徵

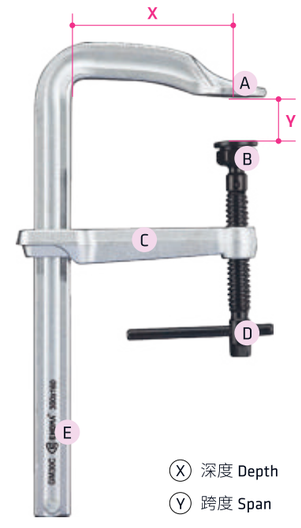

A	Hot forged Head	熱鍛造封頭
B	Cold forged Head	冷鍛造封頭
C	Tempered and hot forged steel for rigidity	剛度用鋼化和熱鍛鋼
D	Specially developed alloyed steel. Hardened screws for strong tightening force	特別開發的合金鋼。堅固的螺釘，擰緊力强
E	Cold drawn profiled steel with precisely controlled temper and harden process on the whole body for high pressure strength. Nickel and chrome plating for high corrosion resistance	精密控制回火和對整個身體進行硬化處理，以獲得高壓强度。鍍鎳和鍍鉻，耐腐蝕性高

Clamp Display Trolley
夾鉗展示架

產品特性

展示架材質為高穩定性的鋼骨，可用於銷售展示夾鉗，
僅需佔60x90公分的賣場地板空間。
本展示架亦可使用於工作場所，當作夾鉗工作車使用。

FEATURES

The clamp trolley is mostly used in the shop floor area due to its high stability and steel construction.
It takes up only 60x90cm floor space.
The clamp trolley is used as a sales display, and also as a tooling stand in a workshop.

型號 MODEL	宽X深X高 WIDTH X DEPTH X HEIGHT(mm)	脚轮 CASTER	單重 WEIGHT (kg)	包裝 PACK (PCS)
DP1	800 X 575 X 1560	75 X 32	39	1
		* Includes hooks 3cmx16 pcs		
DPS	933 X 400 X 2300	-	37	1
		* Includes hooks 5cm x 20 pcs/ 15cm x 20 pcs		

DP1

DPS

General Purpose Clamp Ratchet Handle
通用夾鉗 棘輪型

產品特性

特殊設計

獨家專利雙向棘輪結構 + 水平手柄。

A.雙向棘輪結構:雙向結構設計可快速夾緊物件,進而提高工作效率。

B.水平手柄:力手柄可輕鬆達到高夾持力,提高工作質量。

不受限工作環境與夾持物

克服受限的作業情況,並可符合人體工學操作方式。

取代特殊夾鉗

可用於大多數作業情況,無須再因少數特定狀況購買特殊夾鉗,降低夾鉗使用成本。

塑膠護套(P.P.PAD)可供選配。

使用護套可避免夾持時傷害木製物品表面。(限27.0mm型鋼以下)。

FEATURES

The plastic handle is made of TPR material.
The clamping pressure is measured at the span of 150mm.
Extra P.P. pads can be ordered together with the clamp or separately as accessories .

2-WAY RATCHET CLAMP

The Human factors engineering design can force fast,easily, and make the most of the clamp performance.
It improves working efficiency, increases working quality and keep working in limited space.

STANDARD SERIES

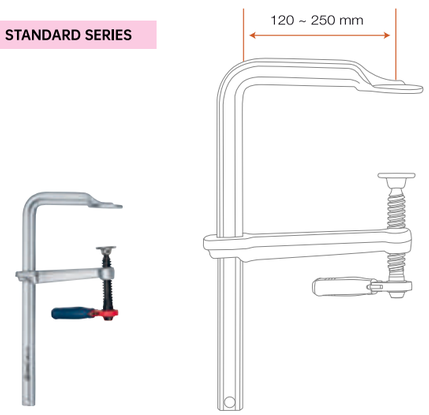

標準喉深系列 GENERAL PURPOSE STANDARD SERIES

型號 MODEL	跨距x喉深 SPAN X DEPTH (mm)	型鋼 RAIL (mm)	單重 WEIGHT (kg)	夾持力 PRESSURE (kg)	包裝 PACK (PCS)
G30R	300 X 140	25.0 x 12.0	1.98	670	10
SG30R	300 X 120		1.89	750	
SG40R	400 X 120		2.10		
SG50R	500 X 120		2.31		
SG60R	600 X 120		2.52		
SG80R	800 X 120	27.0 X 13.0	3.41	1000	6
SG100R	1000 X 120		3.89		
SG125R	1250 X 120		4.52		4
SG150R	1500 X 120		5.04		
GSE25R	250 X 120	30.0 x 15.0	2.63	1200	10
GSE30R	300 X 120		2.84		
GSE40R	400 X 120		3.19		6
GSE50R	500 X 120		3.41		
GSE60R	600 X 120		3.88		
GSE80R	800 X 120		4.38		
GSE100R	1000 X 120		4.99		4
GSE125R	1250 X 120		5.78		
GSE150R	1500 X 120		6.58		

長喉深系列 GENERAL PURPOSE DEEP SERIES

型號 MODEL	跨距x喉深 SPAN X DEPTH (mm)	型鋼 RAIL (mm)	單重 WEIGHT (kg)	夾持力 PRESSURE (kg)	包裝 PACK (PCS)
G40R	400 X 175	27.0 x 13.0	2.71	700	10
G60R	600 X 175		3.20		6
G80R	800 X 175		3.69		
G100R	1000 X 175		4.17		
SD30T20R	300 X 200	30.0 x 15.0	3.08	800	6
SD40T20R	400 X 200		3.39		
SD50T20R	500 X 200		3.66		
SD60T20R	600 X 200		3.99		
SD80T20R	800 X 200		4.91		4
SD100T20R	1000 X 200		5.23		
SD40T25R	400 X 250	30.0 x 15.0	3.66	700	6
SD50T25R	500 X 250		4.21		
SD60T25R	600 X 250		4.51		
SD80T25R	800 X 250		5.11		4
SD100T25R	1000 X 250		5.81		

General Purpose Clamp Ratchet Handle
通用夾鉗 棘輪型

配件 PARTS

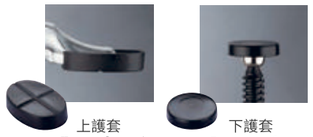

上護套 Top soft pad　下護套 Bottom soft pad

P墊 P-Pad　V墊 V-Pad　R墊 R-Pad

更換步驟簡單。標準附件為P-墊。V-Pad和R-Pad是可選的

Easy replacement step. The standard accessory is P-Pad.The V-Pad and R-Pad are optional

S-R SERIES

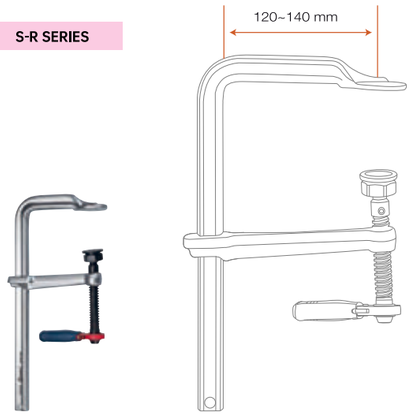

重型夾鉗S-R系列 METAL WORKING S-R SERIES

型號 MODEL	跨距x喉深 SPAN X DEPTH (mm)	型鋼 RAIL (mm)	單重 WEIGHT (kg)	夾持力 PRESSURE (kg)	包裝 PACK (PCS)
S30R	300 x 140	25.0 X 12.0	2.11	670	10
S40R	400 X 120		2.22	750	
S50R	500 X 120		2.44		
S60R	600 X 120		2.64		
S20R12	200 X 120	27.0 X 13.0	2.11	1000	10
S25R12	250 X 120		2.23		
S30R12	300 X 120		2.35		
S40R12	400 X 120		2.60		
S50R12	500 X 120		2.85		
S60R12	600 X 120		3.10		6
GS25R	250 X 120	30.0 x 15.0	2.87	1200	6
GS30R	300 X 140		3.07		
GS40R	400 X 120		3.31		
GS50R	500 X 140		3.77		
GS60R	600 X 120		3.98		
GS80R	800 X 140		4.73		
GS100R	1000 X 120		5.26		4
GS125R	1250 X 120		6.05		
GS150R	1500 X 120		6.76		

General Purpose Pivot/ Plastic/ Wood and T-Handle

通用夾鉗 好用/塑膠/實木和T型手柄

產品特性

通用型夾鉗的木柄採用橡膠木。
雙色手柄採用軟(TPV)硬(PP)二種塑料搭配，握感極佳且可增加止滑力。
T型鐵柄有利於扭轉施力，且有必要時可使用其他輔助工具以幫助施力。

塑膠護套(P.P.PAD)可供選配。
使用護套可避免夾鉗時傷害木製物品表面。(限27.0mm型鋼以下)。

FEATURES

The Wood handle is made of rubber tree.
The component plastic handle is made of P.P. and T.P.V. material.
The clamping pressure is measured at the span of 150mm.
Extra P.P. pads can be ordered together with the clamp or separately as accessories.

• P.P. Pads are not compatible with GSE20~GSE150.

STANDARD SERIES

More Power and easy use

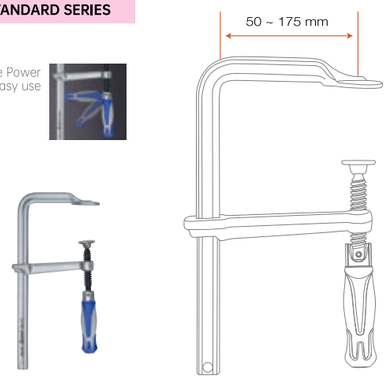

STANDARD SERIES

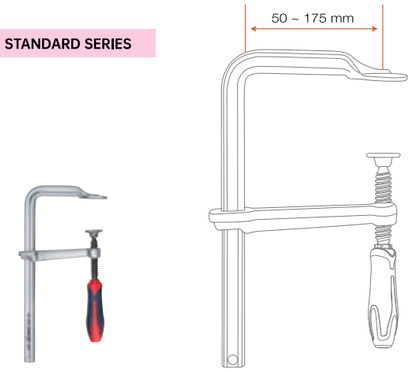

標準喉深系列 GENERAL PURPOSE STANDARD SERIES

型號 MODEL	跨距x喉深 SPAN X DEPTH (mm)	型鋼 RAIL (mm)	單重 WEIGHT (kg)	夾持力 PRESSURE (kg)	包裝 PACK (PCS)
REG16C	160 x 80	16.0 X 7.5	0.59	300	10
REG20C8	200 x 80		0.62		
REG30C8	300 x 80		0.71		
REG40C8	400 x 80		0.79		
REG20C	200 x 100	19.5 X 9.5	0.98	450	10
REG30C10	300 x 100		1.10		
REG50C10	500 x 100		1.36		
REG25C	250 x120	22.0 X 10.5	1.33	550	10
REG30C12	300 x120		1.41		
REG40C12	400 x120		1.57		
REG50C12	500 x120		1.74		
REG60C12	600 x120		1.90		
REG80C12	800 x120		2.23		6
REG100C12	1000 x120		2.55		
REG30C	300 x140	25.0 X 12.0	1.98	670	10
RESG30C	300 X 120	25.0 X 12.0	1.91	750	10
RESG40C	400 x 120		2.04		
RESG50C	500 x 120		2.25		
RESG60C	600 x 120		2.46		
RESG80C	800 x 120	27.0 X 13.0	3.40	1000	6
RESG100C	1000 x 120		3.88		
RESG125C	1250 x 120		4.50		4
RESG150C	1500 x 120		5.11		
REG40C	400 x 175	27.0 X 13.0	2.70	700	10
REG60C	600 x 175		3.19		6
REG80C	800 x 175		3.68		
REG100C	1000 x 175		4.17		

標準喉深系列 GENERAL PURPOSE STANDARD SERIES

型號 MODEL	跨距x喉深 SPAN X DEPTH (mm)	型鋼 RAIL (mm)	單重 WEIGHT (kg)	夾持力 PRESSURE (kg)	包裝 PACK (PCS)
G10P	100 X 50	11.5 X 5.7	0.18	220	10
G20P5	200 X 50		0.22		
G30P5	300 X 50		0.27		
G12P	120 X 60	13.5 X 6.5	0.30	270	10
G20P6	200 X 60		0.35		
G30P6	300 X 60		0.41		
G16P	160 X 80	16.0 X 7.5	0.50	300	10
G20P8	200 X 80		0.54		
G30P8	300 X 80		0.63		
G40P8	400 X 80		0.70		
G20P	200 X 100	19.5 X 9.5	0.88	450	10
G30P10	300 X 100		1.00		
G50P10	500 X 100		1.26		
G25P	250 X 120	22.0 X 10.5	1.23	550	10
G30P12	300 X 120		1.31		
G40P12	400 X 120		1.47		
G50P12	500 X 120		1.63		
G60P12	600 X 120		1.79		
G80P12	800 X 120		2.13		6
G100P12	1000 X120		2.57		
G30P	300 X 140	25.0 X 12.0	1.85	670	10
SG30P	300 X 120	25.0 X 12.0	1.78	750	10
SG40P	400 X 120		1.97		
SG50P	500 X 120		2.18		
SG60P	600 X 120		2.39		
SG80P	800 X 120	27.0 X 13.0	3.27	1000	6
SG100P	1000 X 120		3.75		
SG125P	1250 X 120		4.35		4
SG150P	1500 X 120		4.98		
G40P	400 X 175	27.0 X 13.0	2.57	700	10
G60P	600 X 175		3.06		6
G80P	800 X 175		3.55		
G100P	1000 X 175		4.03		

General Purpose Pivot/ Plastic/ Wood and T-Handle

通用夾鉗 好用/塑膠/實木和T型手柄

配件 PARTS

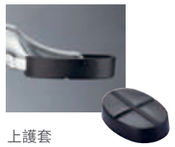

上護套
Top Soft Pad

下護套
Bottom Soft Pad

STANDARD SERIES

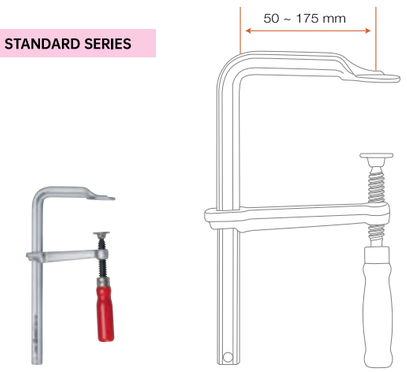

STANDARD SERIES

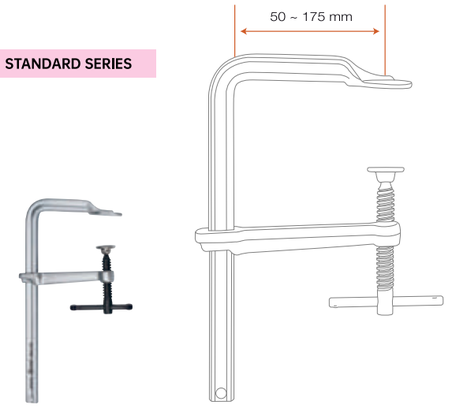

標準喉深系列 GENERAL PURPOSE STANDARD SERIES

型號 MODEL	跨距x喉深 SPAN X DEPTH (mm)	型鋼 RAIL (mm)	單重 WEIGHT (kg)	夾持力 PRESSURE (kg)	包裝 PACK (PCS)
G10C	100 X 50	11.5 X 5.7	0.18	220	10
G20C5	200 X 50		0.22		
G30C5	300 X 50		0.27		
G12C	120 X 60	13.5 X 6.5	0.30	270	10
G20C6	200 X 60		0.35		
G30C6	300 X 60		0.41		
G16C	160 X 80	16.0 X 7.5	0.50	300	10
G20C8	200 X 80		0.54		
G30C8	300 X 80		0.63		
G40C8	400 X 80		0.70		
G20C	200 X 100	19.5 X 9.5	0.88	450	10
G30C10	300 X 100		1.00		
G50C10	500 X 100		1.26		
G25C	250 X 120	22.0 X 10.5	1.23	550	10
G30C12	300 X 120		1.31		
G40C12	400 X 120		1.47		
G50C12	500 X 120		1.63		
G60C12	600 X 120		1.79		
G80C12	800 X 120		2.13		6
G100C12	1000 X120		2.57		
G30C	300 X 140	25.0 X 12.0	1.85	670	10
SG30C	300 X 120	25.0 X 12.0	1.78	750	10
SG40C	400 X 120		1.97		
SG50C	500 X 120		2.18		
SG60C	600 X 120		2.39		
SG80C	800 X 120	27.0 X 13.0	3.27	1000	6
SG100C	1000 X 120		3.75		
SG125C	1250 X 120		4.35		4
SG150C	1500 X 120		4.98		
G40C	400 X 175	27.0 X 13.0	2.57	700	10
G60C	600 X 175		3.06		6
G80C	800 X 175		3.55		
G100C	1000 X 175		4.03		

標準喉深系列 GENERAL PURPOSE STANDARD SERIES

型號 MODEL	跨距x喉深 SPAN X DEPTH (mm)	型鋼 RAIL (mm)	單重 WEIGHT (kg)	夾持力 PRESSURE (kg)	包裝 PACK (PCS)
G10CS	100 X 50	11.5 X 5.7	0.19	220	10
G20CS5	200 X 50		0.23		
G30CS5	300 X 50		0.28		
G12CS	120 X 60	13.5 X 6.5	0.28	270	10
G20CS6	200 X 60		0.33		
G30CS6	300 X 60		0.40		
G16CS	160 X 80	16.0 X 7.5	0.50	300	10
G20CS8	200 X 80		0.53		
G30CS8	300 X 80		0.62		
G40CS8	400 X 80		0.70		
G20CS	200 X 100	19.5 X 9.5	0.88	450	10
G30CS10	300 X 100		1.00		
G50CS10	500 X 100		1.26		
G25CS	250 X 120	22.0 X 10.5	1.23	550	10
G30CS12	300 X120		1.32		
G40CS12	400 X 120		1.48		
G50CS12	500 X 120		1.65		
G60CS12	600 X 120		1.80		
G80CS12	800 X 120		2.13		6
G100CS12	1000 X 120		2.45		
G30CS	300 X 140	25.0 X 12.0	1.85	670	10
SG30CS	300 X 120	25.0 X 12.0	1.76	750	10
SG40CS	400 X 120		1.97		
SG50CS	500 X 120		2.18		
SG60CS	600 X 120		2.39		
SG80CS	800 X 120	27.0 X 13.0	3.27	1000	6
SG100CS	1000 X 120		3.75		
SG125CS	1250 X 120		4.38		4
SG150CS	1500 X 120		4.90		
GSE20	200 X 120	30.0 X 15.0	2.30	1200	10
GSE25	250 X 120		2.52		
GSE30	300 X 120		2.73		
GSE40	400 X 120		3.08		6
GSE50	500 X 120		3.30		
GSE60	600 X 120		3.77		
GSE80	800 X 120		4.27		
GSE100	1000 X 120		4.88		4
GSE125	1250 X 120		5.67		
GSE150	1500 X 120		6.47		
G40CS	400 X 175	27.0 X 13.0	2.57	700	10
G60CS	600 X 175		3.06		6
G80CS	800 X 175		3.55		
G100CS	1000 X 175		4.03		

General Purpose Clamp Quick Lever
通用夾鉗 速捷型

產品特性

速捷型夾鉗之藍色烤漆手把為鋅合金。
棘輪式設計，可在最短時間夾緊、鬆放，
節省人工成本，增加工作效率。

FEATURES

For high pressure, fast action clamping purpose.
Ratchet type lever prevents overloading and resists vibration.
The clamping pressure is measured at the span of 150mm.

配件 PARTS

速捷型護套
Soft Pad For Quick Lever

上護套
Top Soft Pad

塑膠護套(P.P.PAD)可供選配。
Extra p.p.pads can be ordered for protecting the workpiece.

L SERIES

Easy to Use

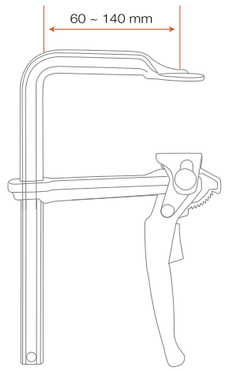

速捷型系列 GENERAL PURPOSE QUICK LEVER SERIES

型號 MODEL	跨距x喉深 SPAN X DEPTH (mm)	型鋼 RAIL (mm)	單重 WEIGHT (kg)	夾持力 PRESSURE (kg)	包裝 PACK (PCS)
G12L	120 X 60	13.5 X 6.5	0.53	160	10
G16L	160 X 80	16.0 X 7.5	0.67	300	10
G20L8	200 X 80		0.70		
G30L8	300 X 80		0.83		
G40L8	400 X 80		0.92		
G20L	200 X 100	19.5 X 9.5	1.13	350	10
G30L10	300 X 100		1.25		
G50L10	500 X 100		1.50		
G25L	250 X 120	22.0 X 10.5	1.50	400	10
G30L12	300 X 120		1.58		
G40L12	400 X 120		1.76		
G50L12	500 X 120		1.90		
G60L12	600 X 120		2.07		
G30L	300 X 140	25.0 X 12.0	2.26	500	10
G40L14	400 X 140		2.50		
G50L14	500 X 140		2.72		
G60L14	600 X 140		2.92		6
G40L	400 X 120	25.0 X 12.0	2.40	550	10
G50L	500 X 120		2.62		
G60L	600 X 120		2.83		6
G80L	800 X 120	27.0 X 13.0	3.64	600	6
G100L	1000 X 120		4.22		

General Purpose Diamond Handle
通用夾鉗 鑽石手柄

產品特性

鑽石型握把:
省力:
可彎曲手柄;增加施力便利性。
省空間:
可彎曲手柄比傳統直式手柄更節省空間。

FEATURES

Diamond Handle:
Labor-Saving:
With pivot structure, more easy to apply clamping force
Space-Saving :
After clamping, the bending handle save much more space than traditional straight handle.

配件 PARTS

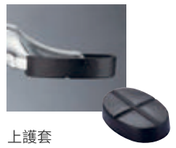

上護套
Top Soft Pad

下護套
Bottom Soft Pad

塑膠護套(P.P.PAD)可供選配。
Extra p.p.pads can be ordered for protecting the workpiece.

D SERIES

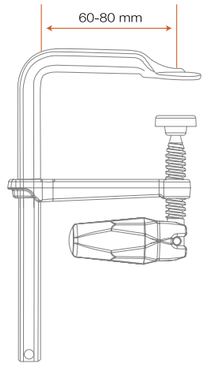

標準喉深系列 GENERAL PURPOSE STANDARD SERIES

型號 MODEL	跨距x喉深 SPAN X DEPTH (mm)	型鋼 RAIL (mm)	單重 WEIGHT (kg)	夾持力 PRESSURE (kg)	包裝 PACK (PCS)
G12D	120 X 60	13.5 X 6.5	0.30	270	10
G20D6	200 X 60		0.35		
G30D6	300 X 60		0.41		
G16D	160 X 80	16.0 X 7.5	0.70	300	10
G20D8	200 X 80		0.88		
G30D8	300 X 80		1.00		

General Purpose Deep Series pivot/ Plastic/ Wood/ T Handle

長喉深系列 好用/塑膠/實木/T型手柄

產品特性

通用型夾鉗的木柄採用橡膠木。
雙色手柄採用軟(TPV)硬(PP)二種塑料搭配，握感極佳且可增加止滑力。
T型鐵柄有利於扭轉施力，且有必要時可使用其他輔助工具以幫助施力。

FEATURES

The Wood handle is made of rubber tree.
The component plastic handle is made of P.P. and T.P.V. material.
The clamping pressure is measured at the span of 150mm.

DEEP SERIES

More Power and easy use

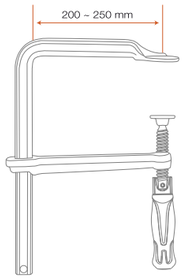

長喉深系列 GENERAL PURPOSE DEEP SERIES					
型號 MODEL	跨距x喉深 SPAN X DEPTH (mm)	型鋼 RAIL (mm)	單重 WEIGHT (kg)	夾持力 PRESSURE (kg)	包裝 PACK (PCS)
RD30T20	300 x 200	30.0 X 15.0	3.21	800	6
RD40T20	400 x 200		3.53		
RD50T20	500 x 200		3.85		
RD60T20	600 x 200		4.15		
RD80T20	800 x 200		4.78		4
RD100T20	1000 x 200		5.41		
RD40T25	400 x 250	30.0 X 15.0	3.76	700	6
RD50T25	500 x 250		4.07		
RD60T25	600 x 250		4.39		
RD80T25	800 x 250		5.02		4
RD100T25	1000 x 250		5.66		

DEEP SERIES

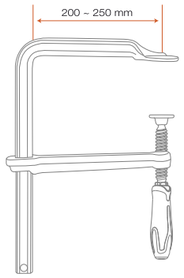

長喉深系列 GENERAL PURPOSE DEEP SERIES					
型號 MODEL	跨距x喉深 SPAN X DEPTH (mm)	型鋼 RAIL (mm)	單重 WEIGHT (kg)	夾持力 PRESSURE (kg)	包裝 PACK (PCS)
PD30T20	300 X 200	30.0 X 15.0	3.06	800	6
PD40T20	400 X 200		3.38		
PD50T20	500 X 200		3.70		
PD60T20	600 X 200		4.02		
PD80T20	800 X 200		4.65		4
PD100T20	1000 X 200		5.28		
PD40T25	400 X 250	30.0 X 15.0	3.61	700	6
PD50T25	500 X 250		3.92		
PD60T25	600 X 250		4.24		
PD80T25	800 X 250		4.87		4
PD100T25	1000 X 250		5.51		

DEEP SERIES

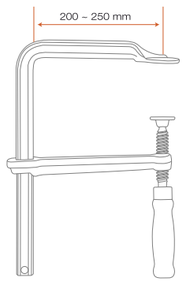

長喉深系列 GENERAL PURPOSE DEEP SERIES					
型號 MODEL	跨距x喉深 SPAN X DEPTH (mm)	型鋼 RAIL (mm)	單重 WEIGHT (kg)	夾持力 PRESSURE (kg)	包裝 PACK (PCS)
WD30T20	300 X 200	30.0 X 15.0	3.06	800	6
WD40T20	400 X 200		3.38		
WD50T20	500 X 200		3.70		
WD60T20	600 X 200		4.02		
WD80T20	800 X 200		4.65		4
WD100T20	1000 X 200		5.28		
WD40T25	400 X 250	30.0 X 15.0	3.61	700	6
WD50T25	500 X 250		3.92		
WD60T25	600 X 250		4.24		
WD80T25	800 X 250		4.87		4
WD100T25	1000 X 250		5.51		

DEEP SERIES

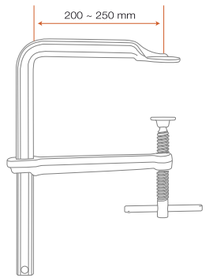

長喉深系列 GENERAL PURPOSE DEEP SERIES					
型號 MODEL	跨距x喉深 SPAN X DEPTH (mm)	型鋼 RAIL (mm)	單重 WEIGHT (kg)	夾持力 PRESSURE (kg)	包裝 PACK (PCS)
SD30T20	300 X 200	30.0 X 15.0	2.97	800	6
SD40T20	400 X 200		3.28		
SD50T20	500 X 200		3.60		
SD60T20	600 X 200		3.92		
SD80T20	800 X 200		4.56		4
SD100T20	1000 X 200		5.20		
SD40T25	400 X 250	30.0 X 15.0	3.55	700	6
SD50T25	500 X 250		3.87		
SD60T25	600 X 250		4.19		
SD80T25	800 X 250		4.82		4
SD100T25	1000 X 250		5.46		

Flat Bar Screw Clamp Wood Handle

通用夾鉗 木手柄扁條螺絲鉗

產品特性

塑膠護套(P.P.PAD)可供選配。
使用護套可避免夾鉗時傷害木製物品表面。(限27.0mm型鋼以下)。

配件 PARTS

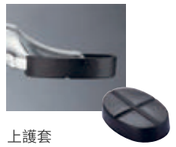

上護套
Top Soft Pad

下護套
Bottom Soft Pad

FEATURES

Steel material enhances ultimate tension. It is a well-designed and practical tool with sliding arm made of nodular graphite cast iron.
The clamping pressure is measured at the span of 150mm.
Extra P.P. pads can be ordered together with the clamp or separately as accessories (Page 107-108).

STANDARD SERIES

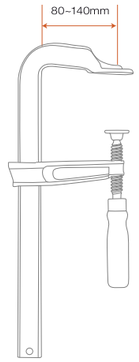

標準喉深系列 GENERAL PURPOSE STANDARD SERIES					
型號 MODEL	跨距x喉深 SPAN X DEPTH (mm)	型鋼 RAIL (mm)	單重 WEIGHT (kg)	夾持力 PRESSURE (kg)	包裝 PACK (PCS)
WA1016	160 X 80	25.0 X 6.0	0.71	330	10
WA1020	200 X 80		0.76		
WA1025	250 X 80		0.82		
WA1030	300 X 80		0.87		
WA1040	400 X 80		0.99		
WA1050	500 X 80		1.10		
WA1060	600 X 80		1.23		
WB2020	200 X 100	30.0 X 8.0	1.19	400	10
WB2025	250 X 100		1.33		
WB2030	300 X 100		1.37		
WB2040	400 X 100		1.55		
WB2050	500 X 100		1.72		
WB2060	600 X 100		1.89		
WB2080	800 X 100		2.28		5
WB3030	300 X 120	30.0 X 8.0	1.58	360	10
WB3040	400 X 120		1.70		
WB3050	500 X 120		1.94		
WB3060	600 X 120		2.12		
WB3080	800 X 120		2.48		5
WB3100	1000 X 120		2.84		
WC3040	400 X 120	35.0 X 9.0	2.29	450	10
WC3050	500 X 120		2.39		
WC3060	600 X 120		2.76		
WC3080	800 X 120		3.24		5
WC3100	1000 X 120		3.64		
WC3120	1200 X 120		4.18		
WC3150	1500 X 120		4.78		
WC4030	300 X 140	35.0 X 9.0	2.15	400	10

DEEP SERIES

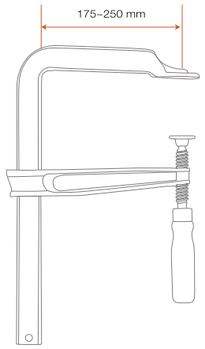

長喉深系列 GENERAL PURPOSE DEEP SERIES					
型號 MODEL	跨距x喉深 SPAN X DEPTH (mm)	型鋼 RAIL (mm)	單重 WEIGHT (kg)	夾持力 PRESSURE (kg)	包裝 PACK (PCS)
WC5040	400 X 175	35.0 X 9.0	2.56	360	10
WC5050	500 X 175		2.80		
WC5060	600 X 175		3.03		5
WC5080	800 X 175		3.50		
WD6030	300 X 200	35.0 X 11.0	2.80	420	5
WD6040	400 X 200		3.10		
WD6050	500 X 200		3.40		
WD6060	600 X 200		3.60		
WD6080	800 X 200		4.20		
WD7040	400 X 250	35.0 X 11.0	3.30	360	5
WD7050	500 X 250		3.60		
WD7060	600 X 250		3.96		
WD7080	800 X 250		4.50		
WD7100	1000 X 250		5.00		

Flat Bar Screw ClampT-Handle

通用夾鉗 T型手柄扁條螺絲鉗

產品特性

塑膠護套(P.P.PAD)可供選配。
使用護套可避免夾持時傷害木製物品表面。(限27.0mm型鋼以下)。

FEATURES

Steel material enhances ultimate tension. It is a well-designed and practical tool with sliding arm made of nodular graphite cast iron.
The clamping pressure is measured at the span of 150mm.
Extra P.P. pads can be ordered together with the clamp or separately as accessories (Page 107-108).

配件 PARTS

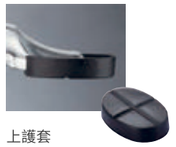

上護套
Top Soft Pad

下護套
Bottom Soft Pad

STANDARD SERIES

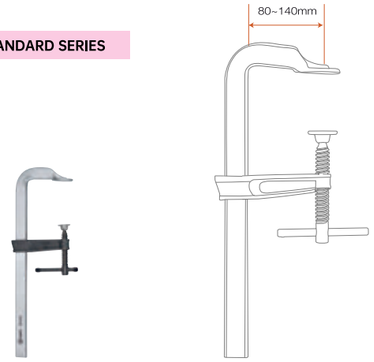

DEEP SERIES

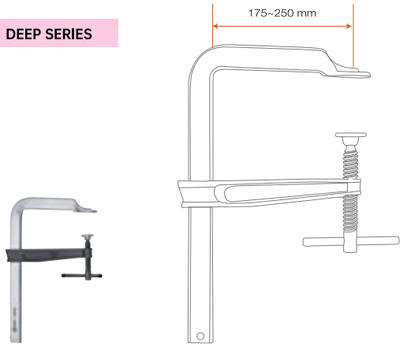

標準喉深系列 GENERAL PURPOSE STANDARD SERIES

型號 MODEL	跨距x喉深 SPAN X DEPTH (mm)	型鋼 RAIL (mm)	單重 WEIGHT (kg)	夾持力 PRESSURE (kg)	包裝 PACK (PCS)
FA1016	160 X 80	25.0 X 6.0	0.71	330	10
FA1020	200 X 80		0.76		
FA1025	250 X 80		0.82		
FA1030	300 X 80		0.87		
FA1040	400 X 80		0.99		
FA1050	500 X 80		1.10		
FA1060	600 X 80		1.23		
FB2020	200 X 100	30.0 X 8.0	1.19	400	10
FB2025	250 X 100		1.33		
FB2030	300 X 100		1.37		
FB2040	400 X 100		1.55		
FB2050	500 X 100		1.72		
FB2060	600 X 100		1.89		
FB2080	800 X 100		2.28		5
FB3030	300 X 120	30.0 X 8.0	1.58	360	10
FB3040	400 X 120		1.70		
FB3050	500 X 120		1.94		
FB3060	600 X 120		2.12		
FB3080	800 X 120		2.48		5
FB3100	1000 X 120		2.84		
FC3040	400 X 120	35.0 X 9.0	2.29	450	10
FC3050	500 X 120		2.39		
FC3060	600 X 120		2.76		
FC3080	800 X 120		3.24		5
FC3100	1000 X 120		3.64		
FC3120	1200 X 120		4.18		
FC3150	1500 X 120		4.78		
FC4030	300 X 140	35.0 X 9.0	2.15	400	10

長喉深系列 GENERAL PURPOSE DEEP SERIES

型號 MODEL	跨距x喉深 SPAN X DEPTH (mm)	型鋼 RAIL (mm)	單重 WEIGHT (kg)	夾持力 PRESSURE (kg)	包裝 PACK (PCS)
FC5040	400 X 175	35.0 X 9.0	2.56	360	10
FC5050	500 X 175		2.80		
FC5060	600 X 175		3.03		5
FC5080	800 X 175		3.50		
FD6030	300 X 200	35.0 X 11.0	2.80	420	5
FD6040	400 X 200		3.10		
FD6050	500 X 200		3.40		
FD6060	600 X 200		3.60		
FD6080	800 X 200		4.20		
FD7040	400 X 250	35.0 X 11.0	3.30	360	5
FD7050	500 X 250		3.60		
FD7060	600 X 250		3.96		
FD7080	800 X 250		4.50		
FD7100	1000 X 250		5.00		

Groove Clamp Plastic / Wood / Diamond / Quick Lever Handle

溝槽鉗 塑膠/實木/鑽石/速捷型手柄

產品特性

本系列F鉗之鼻頭為特殊造型,可適用於特定溝槽,並可搭配工作桌使用。
可依使用需求選擇木柄、速捷型把手、塑膠柄或鑽石手柄。

FEATURES

The Clamp for groove has small and flat head. It can incert or pass through a 12x8mm groove.
Extra p.p.pads can be ordered for protecting the workpiece.

配件 PARTS

實木型護套
Soft Pad For Wood Handle

速捷型護套
Soft Pad For Quick Lever

QUICK LEVER

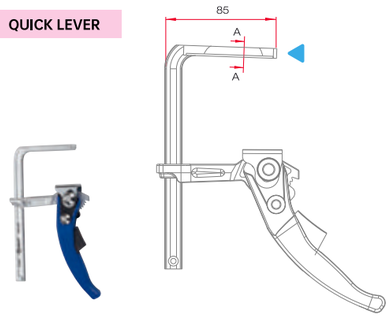

• Cross-sectional viewA-A Proportion 1 : 1

WOOD HANDLE

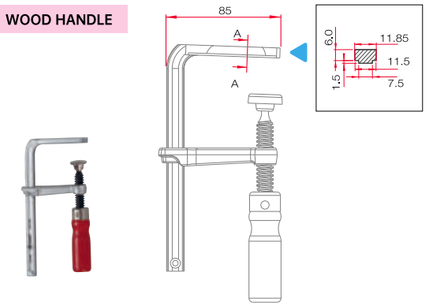

• Cross-sectional viewA-A Proportion 1 : 1

速捷型系列 GROOVE CLAMP QUICK LEVER

型號 MODEL	跨距x喉深 SPAN X DEPTH (mm)	型鋼 RAIL (mm)	單重 WEIGHT (kg)	包裝 PACK (PCS)
G12KL	120 x 60	13.5 X 6.5	0.50	20
G16KL	160 x 60		0.53	
G20KL	200 x 60		0.55	10
G30KL	300 x 60		0.60	

實木手柄系列 GROOVE CLAMP WOOD HANDLE

型號 MODEL	跨距x喉深 SPAN X DEPTH (mm)	型鋼 RAIL (mm)	單重 WEIGHT (kg)	包裝 PACK (PCS)
G12KC	120 x 60	13.5 X 6.5	0.30	20
G16KC	160 x 60		0.33	
G20KC	200 x 60		0.35	10
G30KC	300 x 60		0.40	

PLASTIC HANDLE

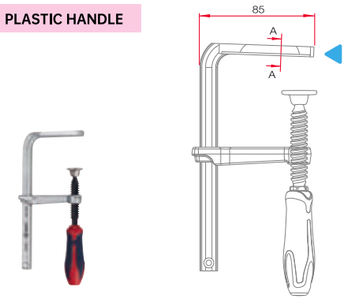

• Cross-sectional viewA-A Proportion 1 : 1

DIAMOND HANDLE

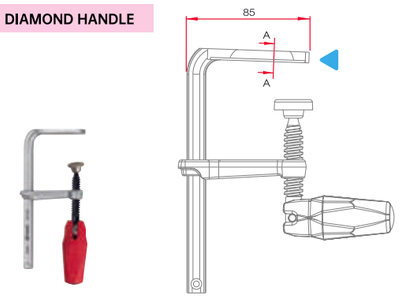

• Cross-sectional viewA-A Proportion 1 : 1

塑膠手柄系列 GROOVE CLAMP PLASTIC HANDLE

型號 MODEL	跨距x喉深 SPAN X DEPTH (mm)	型鋼 RAIL (mm)	單重 WEIGHT (kg)	包裝 PACK (PCS)
G12KP	120 x 60	13.5 X 6.5	0.33	20
G16KP	160 x 60		0.36	
G20KP	200 x 60		0.38	10
G30KP	300 x 60		0.43	

菱形手柄系列 GROOVE CLAMP DIAMOND HANDLE

型號 MODEL	跨距x喉深 SPAN X DEPTH (mm)	型鋼 RAIL (mm)	單重 WEIGHT (kg)	包裝 PACK (PCS)
G12KD	120 x 60	13.5 X 6.5	0.40	20
G16KD	160 x 60		0.43	
G20KD	200 x 60		0.45	10
G30KD	300 x 60		0.50	

Groove-Q Clamp Plastic / Wood / Diamond Handle

溝槽鉗(止滑系統) 塑膠/實木/鑽石手柄

產品特性

鑽石型握把:
省力:
可彎曲手柄;增加施力便利性。
省空間:
可彎曲手柄比傳統直式手柄
更節省空間。

塑膠護套:
保護工件.材質: P.P.

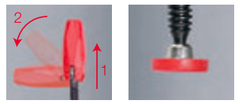

Top Soft Pad (ø25)

止滑系統:
該系統可使滑臂固定在型鋼上的任何位置。
即使鬆開工件,此系統仍將滑臂維持在指定位置,可防滑臂直接滑落。

1
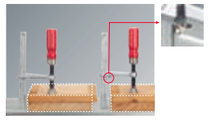

2
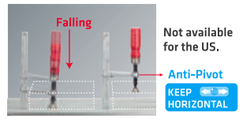

FEATURES

Diamond Handle:
Labor-Saving:
With pivot structure, more easy to apply clamping force.
Space-Saving :
After clamping, the bending handle save much more space than traditional straight handle.

Soft Pad Attached:
Protecting the workpiece.
Material: P.P.

ANTI-PIVOT SYSTEM
This system can hold the sliding arm anywhere on the rail and it also Anti-Pivot the arm during working.Prevent sliding arm from slipping away and changing the distance when clamping, even moving away the workpiece.

DIAMOND HANDLE

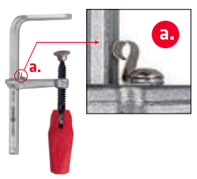

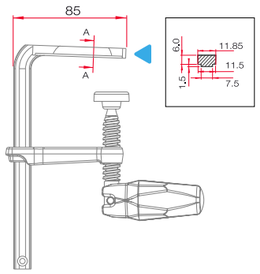

• Cross-sectional viewA-A Proportion 1 : 1

菱形手柄系列 GROOVE-Q CLAMP DIAMOND HANDLE

型號 MODEL	跨距x喉深 SPAN X DEPTH (mm)	型鋼 RAIL (mm)	單重 WEIGHT (kg)	包裝 PACK (PCS)
G12KD	120 x 60	13.5 X 6.5	0.40	20
G16KD	160 x 60		0.43	
G20KD	200 x 60		0.45	10
G30KD	300 x 60		0.50	

WOOD HANDLE

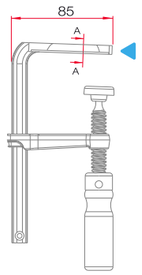

• Cross-sectional viewA-A Proportion 1 : 1

實木手柄系列 GROOVE-Q CLAMP WOOD HANDLE

型號 MODEL	跨距x喉深 SPAN X DEPTH (mm)	型鋼 RAIL (mm)	單重 WEIGHT (kg)	包裝 PACK (PCS)
G12KC-Q	120 x 60	13.5 X 6.5	0.30	20
G16KC-Q	160 x 60		0.33	
G20KC-Q	200 x 60		0.35	10
G30KC-Q	300 x 60		0.40	

PLASTIC HANDLE

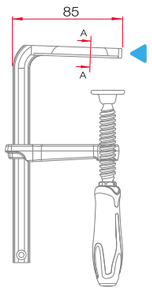

• Cross-sectional viewA-A Proportion 1 : 1

塑膠手柄系列 GROOVE-Q CLAMP PLASTIC HANDLE

型號 MODEL	跨距x喉深 SPAN X DEPTH (mm)	型鋼 RAIL (mm)	單重 WEIGHT (kg)	包裝 PACK (PCS)
G12KP-Q	120 x 60	13.5 X 6.5	0.33	20
G16KP-Q	160 x 60		0.36	
G20KP-Q	200 x 60		0.39	10
G30KP-Q	300 x 60		0.43	

Reverse F Clamp Diamond Handle

反向夾系列 鑽石手柄

產品特性

符合人體工學設計:
相較於下方握把設計,上方握把較符合人體工學。

安全設計:
型鋼保持在工件外側,避免受傷。

鑽石型握把:
省力:
可彎曲手柄;增加施力便利性。
省空間 :
可彎曲手柄比傳統直式手柄更節省空間。

更多產品特色:
由夾鉗頂端進行操作
可輕鬆鬆開夾具
擁有雙向夾緊功能

止滑系統:
(專利止滑系統)):止滑系統可使伸長臂停止於
任意位置,不隨意滑落。

ANS Anti-Slip System Patent

塑膠護套:
保護工件.材質: P.P.

止退:
六角螺絲(m5)

Top Soft Pad (ø25)

Button Soft Pad (ø22)

FEATURES

Ergonomically Designed:
Operating a clamp above the workpiece is more ergonomic than under it.

Industrial safety:
Keep the rail out of the working area to prevent injuries.

Diamond Handle:
Labor-Saving:
With pivot structure, more easy to apply clamping force.
Space-Saving :
After clamping, the bending handle save much more space than traditional straight handle.

More Functions:
F clamp which operates from top of the clamp.
Spreading clamp for light duty.
Double clamping function clamp on one rail.

ANS System (Anti-Slip System, Patented):
ANS system can hold the sliding arm anywhere on the rail.
Prevent sliding arm from slipping away when clamping, even if shaking the clamp.

Soft Pad Attached:
Protecting the workpiece.
Material: P.P.

The Stopper:
Hex Socket Screws (m5)

多功能應用 **MULTI-FUNCTION APPLICATION**

反向夾系列 REVERSE F SERIES

型號 MODEL	跨距x喉深 SPAN X DEPTH (mm)	外撐 SPREADING (mm)	型鋼 RAIL (mm)	單重 WEIGHT (kg)	夾持力 PRESSURE (kg)	包裝 PACK (PCS)
R20-8	200 x 80	145-300	16.0 x 7.5	0.65	320	10
R30-8	300 x 80	145-400		0.74		
R40-8	400 x 80	145-500		0.82		

1608RA

1608RAH

1608R SET

Parallel Jaw Clamp Plastic & Wood Handle

平行夾鉗 塑膠/ 實木柄

產品特性

本體:
中碳鋼

手柄:
1.雙色手柄採用軟(TPV)硬(PP)二種塑料搭配,
握感極佳且可增加止滑力。
2.木柄採用橡膠木,外層則是紅色烤漆。

止滑系統:
(專利止滑系統)):止滑系統可使伸長臂停止於
任意位置,不隨意滑落。

平行夾持面:
施壓更平均且不傷物件

伸長臂:
球墨鑄鐵

止退片:
1.防止伸長臂脫落。
2.可拆解變更伸長臂方向,並使之有外撐功能。
3.可與固定臂同方向於桌面保持水平夾。

FEATURES

Anti-Slip System :
The Anti-Slip System is really handy in work.
1. Prevents the lower jaw sliding or un-clamping.
2. Let the lower jaw clip and stop anywhere at the rail.

Parallel Jaw:
Material: polyamide
The large clamping area and parallel jaws allow the work easier and prevent damaging your workpiece.

Pad:
Material: Steel

Arm:
Ductile cast iron

Rail:
Medium Carbon Steel with nickel and chrome plating.

Screws:
Hardened screws for strong tightening force.

Stopper:
Material: polyamide
1. Prevents the sliding arm moving off.
2. Can be taken off by hand for quickly changing the sliding arm direction to use for spreading.
3. Also can be a hold with the fixed arm to put on the table for horizontal clamping.

PLASTIC HANDLE

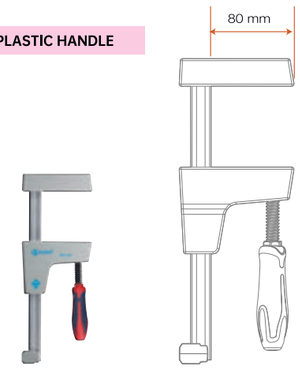

WOOD HANDLE

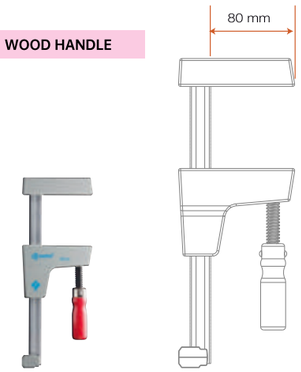

塑膠柄系列 PLASTIC HANDLE SERIES

型號 MODEL	跨距x喉深 SPAN X DEPTH (mm)	外撐 SPREADING (mm)	型鋼 RAIL (mm)	單重 WEIGHT (kg)	夾持力 PRESSURE (kg)	包裝 PACK (PCS)
PJ16P	160 x 80	172-270	20.0 x 5.0	0.65	200	10
PJ30P	300 x 80	172-415		0.75		
PJ60P	600 x 80	172-720		0.95		

實木柄系列 WOOD HANDLE SERIES

型號 MODEL	跨距x喉深 SPAN X DEPTH (mm)	外撐 SPREADING (mm)	型鋼 RAIL (mm)	單重 WEIGHT (kg)	夾持力 PRESSURE (kg)	包裝 PACK (PCS)
PJ16	160 x 80	172-270	20.0 x 5.0	0.60	200	10
PJ30	300 x 80	172-415		0.70		
PJ60	600 x 80	172-720		0.90		

Parallel Jaw Clamp Heavy Duty Plastic/ Pivot Handle

重型平行夾系列 基本/好用型

產品特性

止滑系統:
(專利止滑系統)):止滑系統可使伸長臂停止於
任意位置,不隨意滑落。

平行夾持面:
施壓更平均且不傷物件

墊板:
可更換 不破壞被夾持物 不殘留膠水、油漆和潤滑油

支撐片:
防止本體處碰到物件 圓角設計防止損壞物件

止退片:
可拆解變更伸長臂方向,並使之有外撐功能

基本型固定式手柄:
高品質塑料手柄,符合人體工學設計之握柄

好用型可彎曲手柄(限PJH-R):
更方便使用,角度不設限,高品質塑料手柄,符合人體工學設計之握柄

FEATURES

Anti-Slip System :
ANS system effectively prevents the clamp from dislodging or slipping away.
ANS system can also hold the sliding arm anywhere on the rail.

Pressure Caps:
Replaceable
Protect delicate surfaces
Repellant to glue
Resistant to paint and grease solvents

Stopper:
Can be taken off and converted the sliding arm to spreading function.

Rail:
High quality profiled steel with Zinc plating

Parallel Jaw :
Large parallel clamping surfaces
Forged sliding arm inside (medium carbon steel)

Workpiece Platform:
Prevents directly contacting by the workpiece on the rail.
Round corner design prevents from damaging the workpiece

Ergonomic Handle :
High quality 2-component plastic handle,easy and comfortable to hold

Pivot Handle With Swivel:
User friendly design.
Swivel Helps pivot handle stable when moving the sliding arm.

PLASTIC HANDLE

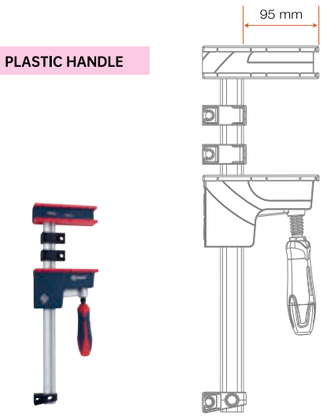

PIVOT HANDLE

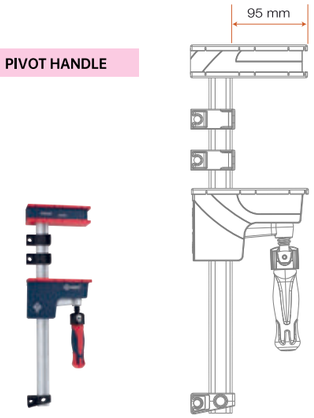

塑膠柄系列 PLASTIC HANDLE SERIES

型號 MODEL	跨距x喉深 SPAN X DEPTH (mm)	外撐 SPREADING (mm)	型鋼 RAIL (mm)	單重 WEIGHT (kg)	夾持力 PRESSURE (kg)	包裝 PACK (PCS)
PJH30	300x95	245~435	29.0 x 9.0	2.30	710	8
PJH60	600x95	245~735		2.80		4
PJH80	800x95	245~935		3.10		
PJH100	1000x95	245~1135		3.50		
PJH125	1250x95	245~1385		3.90		
PJH150	1500x95	245~1635		4.50		
PJH200	2000x95	245~2135		5.50		2
PJH250	2500x95	245~2635		6.10		

好用型系列 PIVOT HANDLE SERIES

型號 MODEL	跨距x喉深 SPAN X DEPTH (mm)	外撐 SPREADING (mm)	型鋼 RAIL (mm)	單重 WEIGHT (kg)	夾持力 PRESSURE (kg)	包裝 PACK (PCS)
PJH30R	300x95	245~435	29.0 x 9.0	2.30	710	8
PJH60R	600x95	245~735		3.00		4
PJH80R	800x95	245~935		3.30		
PJH100R	1000x95	245~1135		3.50		
PJH125R	1250x95	245~1385		4.10		
PJH150R	1500x95	245~1635		4.60		
PJH200R	2000x95	245~2135		5.50		2
PJH250R	2500x95	245~2635		6.40		

Iron Screw Clamp Ductile Cast Plastic Handle

專業碳鋼鑄造F鉗 塑膠柄

產品特性

鑄造系列，為最傳統形式之F型夾鉗。
本體較扁平，材質為中碳鋼。
與ALL STELL系列夾鉗不同在於未經焠火處理。.
本體側邊有鋸齒，可防止伸長臂滑動。
本系列出廠皆附P.P護套。

上護套
Top Soft Pad

下護套
Bottom Soft Pad

FEATURES

Ductile cast iron arm.
P.P. Pad is attached.
The most economical choice.
The component plastic handle is made of P.P. & T.P.V. material.
The wood handle is made of rubber tree.

STANDARD SERIES

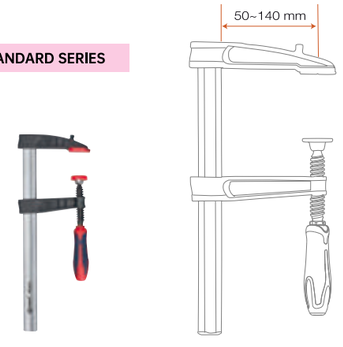

DEEP SERIES

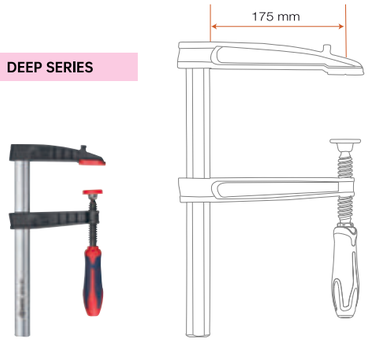

標準喉深系列 STANDARD SERIES

型號 MODEL	跨距x喉深 SPAN X DEPTH (mm)	型鋼 RAIL (mm)	單重 WEIGHT (kg)	夾持力 PRESSURE (kg)	包裝 PACK (PCS)
NA10-5P	100 X 50	15.0 X 5.0	0.29	150	20
NA15-5P	150 X 50		0.32		
NA20-5P	200 X 50		0.35		
NA25-5P	250 X 50		0.38		
NA30-5P	300 X 50		0.41		
NB12-6P	120 X 60	20.0 X 5.0	0.42	200	20
NB20-6P	200 X 60		0.48		
NB30-6P	300 X 60		0.55		
NB40-6P	400 X 60		0.62		
NB50-6P	500 X 60		0.69		
NC16-8P	160 X 80	25.0 X 6.0	0.74	270	10
NC20-8P	200 X 80		0.78		
NC25-8P	250 X 80		0.84		
NC30-8P	300 X 80		0.89		
NC40-8P	400 X 80		1.00		
NC50-8P	500 X 80		1.10		
NC60-8P	600 X 80		1.20		
ND20-10P	200 X 100	27.0 X 7.0	1.11	400	10
ND25-10P	250 X 100		1.18		
ND30-10P	300 X 100		1.24		
ND40-10P	400 X 100		1.38		
ND50-10P	500 X 100		1.52		
ND60-10P	600 X 100		1.65		
NE20-12P	200 X 120	29.0 X 9.0	1.39	500	10
NE25-12P	250 X 120		1.48		
NE30-12P	300 X 120		1.57		
NE40-12P	400 X 120		1.75		
NE50-12P	500 X 120		1.92		6
NE60-12P	600 X 120		2.10		
NE80-12P	800 X 120		2.46		
NE100-12P	1000 X 120		2.81		
NF30-14P	300 X 140	32.0 X 10.0	2.03	550	10
NF40-14P	400 X 140		2.24		
NF50-14P	500 X 140		2.46		6
NF60-14P	600 X 140		2.67		
NF80-14P	800 X 140		3.32		
NF100-14P	1000 X 140		3.54		

長喉深系列 DEEP SERIES

型號 MODEL	跨距x喉深 SPAN X DEPTH (mm)	型鋼 RAIL (mm)	單重 WEIGHT (kg)	夾持力 PRESSURE (kg)	包裝 PACK (PCS)
NF40-17P	400 X 175	32.0 X 10.0	2.33	500	6
NF50-17P	500 X 175		2.55		
NF60-17P	600 X 175		2.76		
NF80-17P	800 X 175		3.41		
NF100-17P	1000 X 175		3.63		

Iron Screw Clamp Ductile Cast Wood Handle

專業碳鋼鑄造F鉗 實木柄

產品特性

鑄造系列，為最傳統形式之F型夾鉗。
本體較扁平，材質為中碳鋼。
與ALL STEEL系列夾鉗不同在於未經焠火處理。
本體側邊有鋸齒，可防止伸長臂滑動。
本系列出廠皆附P.P. 護套。

上護套
Top Soft Pad

下護套
Bottom Soft Pad

FEATURES

Ductile cast iron arm.
P.P. Pad is attached.
The most economical choice.
The component plastic handle is made of P.P. & T.P.V. material.
The wood handle is made of rubber tree.

STANDARD SERIES

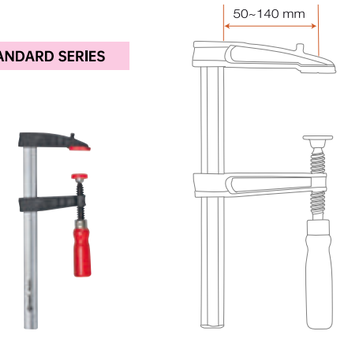

DEEP SERIES

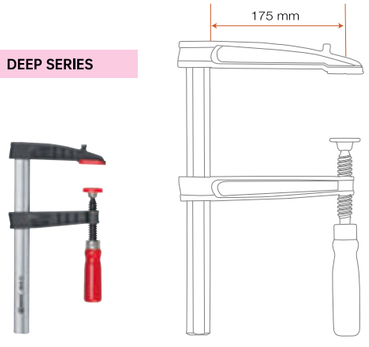

標準喉深系列 STANDARD SERIES

型號 MODEL	跨距x喉深 SPAN X DEPTH (mm)	型鋼 RAIL (mm)	單重 WEIGHT (kg)	夾持力 PRESSURE (kg)	包裝 PACK (PCS)
NA10-5	100 X 50	15.0 X 5.0	0.29	150	20
NA15-5	150 X 50		0.32		
NA20-5	200 X 50		0.35		
NA25-5	250 X 50		0.38		
NA30-5	300 X 50		0.41		
NB12-6	120 X 60	20.0 X 5.0	0.42	200	20
NB20-6	200 X 60		0.48		
NB30-6	300 X 60		0.55		
NB40-6	400 X 60		0.62		
NB50-6	500 X 60		0.69		
NC16-8	160 X 80	25.0 X 6.0	0.74	270	10
NC20-8	200 X 80		0.78		
NC25-8	250 X 80		0.84		
NC30-8	300 X 80		0.89		
NC40-8	400 X 80		1.00		
NC50-8	500 X 80		1.10		
NC60-8	600 X 80		1.20		
ND20-10	200 X 100	27.0 X 7.0	1.11	400	10
ND25-10	250 X 100		1.18		
ND30-10	300 X 100		1.24		
ND40-10	400 X 100		1.38		
ND50-10	500 X 100		1.52		
ND60-10	600 X 100		1.65		
NE20-12	200 X 120	29.0 X 9.0	1.39	500	10
NE25-12	250 X 120		1.48		
NE30-12	300 X 120		1.57		
NE40-12	400 X 120		1.75		
NE50-12	500 X 120		1.92		6
NE60-12	600 X 120		2.10		
NE80-12	800 X 120		2.46		
NE100-12	1000 X 120		2.81		
NF30-14	300 X 140	32.0 X 10.0	2.03	550	10
NF40-14	400 X 140		2.24		
NF50-14	500 X 140		2.46		6
NF60-14	600 X 140		2.67		
NF80-14	800 X 140		3.32		
NF100-14	1000 X 140		3.54		

長喉深系列 DEEP SERIES

型號 MODEL	跨距x喉深 SPAN X DEPTH (mm)	型鋼 RAIL (mm)	單重 WEIGHT (kg)	夾持力 PRESSURE (kg)	包裝 PACK (PCS)
NF40-17	400 X 175	32.0 X 10.0	2.33	500	6
NF50-17	500 X 175		2.55		
NF60-17	600 X 175		2.76		
NF80-17	800 X 175		3.41		
NF100-17	1000 X 175		3.63		

Strong-Hold Multiple Pad S-C/ GS

重型夾鉗 S-C / GS系列

產品特性

本系列夾鉗使用於鐵工、鋼構、焊接、鑄造、機械等，特別需要強力夾持力之作業。
因應不同夾持力之需求，本系列產品可提供最高2200kg之夾持力。
27型鋼以上之產品其T柄與六角尾端皆可透過其他工具輔助，便於加強施力。
標準品附平面壓蓋，可因物品表面形狀不同搭配不同需求之壓蓋使用。

FEATURES

Three replaceable clamping pads are available and can be quickly replaced.
Hexagon design of the screws' end is good for reinforced clamping.
The clamping pressure is measured at the span of 150mm.

Easy replacement step. The standard accessory is P-Pad.

Use hexagon socket wrench to strengthen for applying force

Hexagon End

配件 PARTS

P墊
P-Pad

V墊
V-Pad

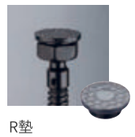

R墊
R-Pad

S-C SERIES

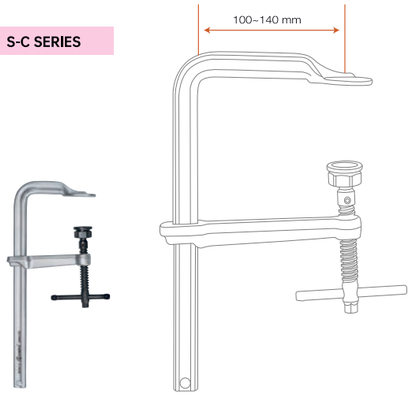

GS SERIES

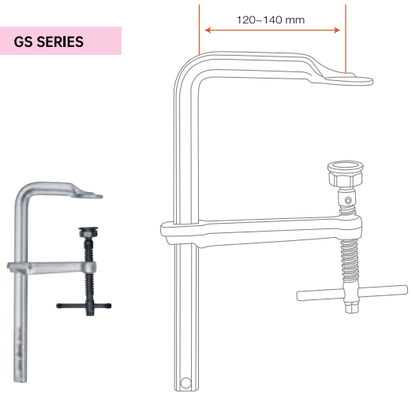

S-C系列 S-C SERIES

型號 MODEL	跨距x喉深 SPAN X DEPTH (mm)	型鋼 RAIL (mm)	單重 WEIGHT (kg)	夾持力 PRESSURE (kg)	包裝 PACK (PCS)
S20C	200 X 100	19.5x9.5	1.00	450	10
S25C	250 X 120	22.0x10.5	1.30	550	
S30C	300 X 140	25.0x12.0	1.97	670	
S40C	400 X 120	25.0x12.0	2.08	750	
S50C	500 X 120		2.30		
S60C	600 X 120		2.50		
S20C12	200 X 120	27.0 X 13.0	1.97	1000	
S25C12	250 X 120		2.09		
S30C12	300 X 120		2.21		
S40C12	400 X 120		2.46		
S50C12	500 X 120		2.71		
S60C12	600 X 120		2.96		6

GS系列 GS SERIES

型號 MODEL	跨距x喉深 SPAN X DEPTH (mm)	型鋼 RAIL (mm)	單重 WEIGHT (kg)	夾持力 PRESSURE (kg)	包裝 PACK (PCS)
GS25C	250 X 120	30.0 x15.0	2.76	1200	6
GS30C	300 X 140		2.96		
GS40C	400 X 120		3.20		
GS50C	500 X 140		3.66		
GS60C	600 X 120		3.87		
GS80C	800 X 140		4.62		
GS100C	1000 X 120		5.15		4
GS125C	1250 X 120		5.94		
GS150C	1500 X 120		6.65		

Strong-Hold Multiple Pad SS

重型夾鉗 SS系列

產品特性

本系列夾鉗使用於鐵工、鋼構、焊接、鑄造、機械等，特別需要強力夾持力之作業。
因應不同夾持力之需求，本系列產品可提供最高2200kg之夾持力。
27型鋼以上之產品其T柄與六角尾端皆可透過其他工具輔助，便於加強施力。
標準品附平面壓蓋，可因物品表面形狀不同搭配不同需求之壓蓋使用。

FEATURES

Three replaceable clamping pads are available and can be quickly replaced.
Hexagon design of the screws' end is good for reinforced clamping.
The clamping pressure is measured at the span of 150mm.

Easy replacement step. The standard accessory is P-Pad.

Use hexagon socket wrench to strengthen for applying force

Hexagon End

配件 PARTS

P墊
P-Pad

V墊
V-Pad

R墊
R-Pad

SS SERIES

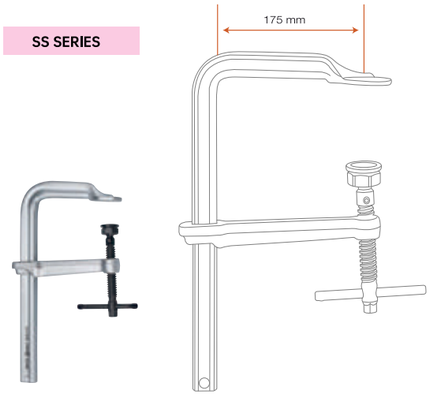

SS系列 SS SERIES

型號 MODEL	跨距x喉深 SPAN X DEPTH (mm)	型鋼 RAIL (mm)	單重 WEIGHT (kg)	夾持力 PRESSURE (kg)	包裝 PACK (PCS)
SS30C	300 X 175	40.0 x 20.0	5.50	2200	4
SS40C	400 X 175		6.06		
SS50C	500 X 175		6.62		
SS60C	600 X 175		7.18		2
SS80C	800 X 175		8.30		
SS100C	1000 X 175		9.43		
SS125C	1250 X 175		10.83		
SS150C	1500 X 175		12.05		

Clamp Strong Grip
強力夾鉗 虎齒系列

產品特性

虎齒系列的鼻頭與壓蓋皆有槽紋設計，可增加夾持之摩擦力。
27型鋼以上之產品其T柄與六角尾端皆可透過其他工具輔助，便於加強施力。

FEATURES

The special curve design maximizes the efficiency of the throat depth.
The clamping pressure is measured at the span of 150mm.

Use hexagon socket wrench to strengthen for applying force

Hexagon End

Textured surface

STRONG-GRIP SERIES

強力系列 STRONG-GRIP SERIES

型號 MODEL	跨距x喉深 SPAN X DEPTH (mm)	型鋼 RAIL (mm)	單重 WEIGHT (kg)	夾持力 PRESSURE (kg)	包裝 PACK (PCS)
S15C6	150 X 60	19.5 X 9.5	0.72	600	10
S20C10	200 X 100	25.0 X 12.0	1.50	800	
S25C10	250 X 100		1.61		
S30C10	300 X 100		1.72		

Clamp Parallel Screw
平行夾 PLC 系列

產品特性

雙螺桿能使上下臂平行移動。
輕巧，並特別針對小於100 mm的物件做設計，使用者能更精確地操作。

FEATURES

The double screws allow exact parallel movement of the jaws.
A light and handy clamp for accurate use.
The clamp is particularly suitable for workpieces less than 100mm.

PLC SERIES

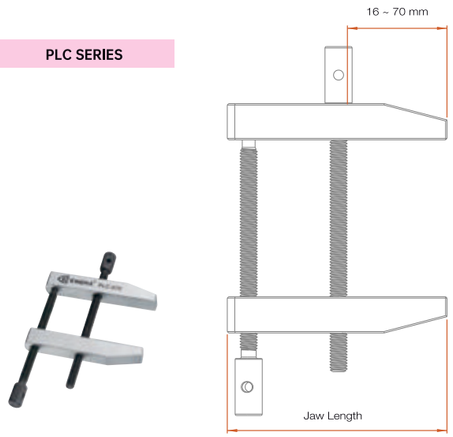

PLC系列 PLC SERIES

型號 MODEL	跨距x喉深 SPAN X DEPTH (mm)	上下臂長度 JAW LENGTH (mm)	單重 WEIGHT (kg)	包裝 PACK (PCS)
PLC-028	28 x16	50	0.09	50
PLC-040	40x25	60	0.15	
PLC-055	55x35	75	0.25	
PLC-070	70x50	100	0.45	20
PLC-105	105x70	150	0.90	

Cantilever C-Clamp Quick Adjustable

螃蟹鉗 懸臂式C型夾鉗

產品特性

螃蟹夾(懸臂式C型夾鉗)多適用於鐵工。
夾持力臂設計可跨越式夾持，例如夾持H型物件。
螃蟹夾之材質為高張力的鉻鉬鋼，具有同型產品最高之夾持力。
懸臂握把設計使把手在工作範圍外，有利於使用施力。

夾持顎的四種不同面向:

1.平面: 一般用途。
2.凹槽狀:增加的表面之間的摩擦。
3.V型: 適合夾持圓形工件。
4.X型: 適合圓形、角鋼的工件。

FEATURES

Floating jaws always stay parallel.
C-term design makes it's possible to clamp workpieces like H beam.

Plates made from high tensile steel:
Chrome-Molybdenum alloy steel.

Cantilever clamping action:
The handle is out of work area.

4 Different Gripping Surfaces:
1.Smooth Surface: For general purpose clamping.
2.extured Surface: Increase friction between the clamping surface.
3.V Block: Good for clamping round workpiece.
4.X Block: Good for clamping round workpiece, angle bar

CTC-1/ 2/ 3 SERIES

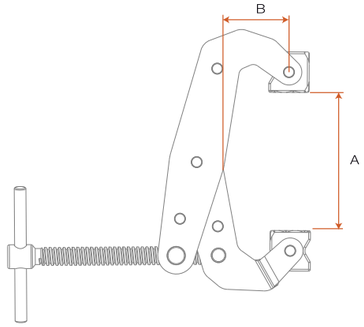

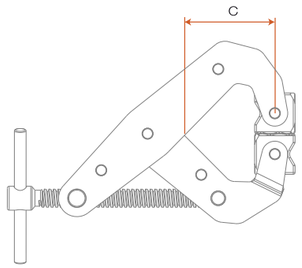

CTC-1/ 2/ 3系列 CTC-1/ 2/ 3 SERIES

型號 MODEL	跨距A SPAN A (inch/mm)	喉深B DEPTH B (mm)	喉深C DEPTH C (mm)	單重 WEIGHT (kg)	夾持力 PRESSURE (kg)	包裝 PACK (PCS)
CTC-1	1"/ 25	15	20	0.06	130	50
CTC-2	2"/ 50	33	42	0.25	310	
CTC-3	3"/ 75	35	49	0.52	500	20

Cantilever C-Clamp Quick Adjustable

螃蟹鉗 懸臂式C型夾鉗

產品特性

快速調整夾持距離與快速鬆脫之專利裝置:

1.快速調整跨距的結構專利。
2.鉻鉬合金鋼材質。CTC-3，4.5和6使用粗牙螺紋：更快、更強的調整大小和跨距。
3.保護勞工的人因結構設計使操作更安全。
4.傳動螺母可旋轉的設計，不只有防夾結構且可使旋轉傳動螺母更加順暢。
5.彈簧協助快速調整功能。

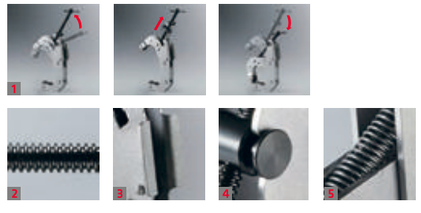

FEATURES

Function:

1.Patent for quickly adjusting the span of the clamp.
2.Alloyed steel : Coarse thread More rigid: Faster re-size the span and stronger.
3.Plates design with labor-saving function, easier to operate "Quickly adjusting span device".
4.Drive nut design with caps to prevent injure and to rotate the drive nut more smoothly.
5.Provide quickly adjusting function.

CTC-4.5/ CTC-6 SERIES

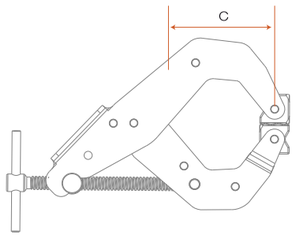

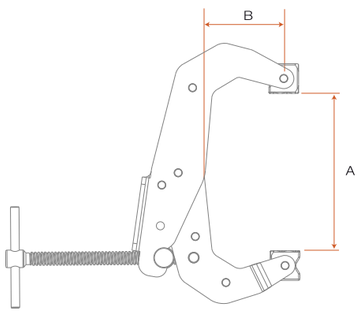

CTC-4.5/ CTC-6系列 CTC-4.5/ CTC-6 SERIES

型號 MODEL	跨距A SPAN A (inch/mm)	喉深B DEPTH B (mm)	喉深C DEPTH C (mm)	單重 WEIGHT (kg)	夾持力 PRESSURE (kg)	包裝 PACK (PCS)
CTC-4.5	4.5" / 110	58	78	0.80	680	20
CTC-6	6" / 150	110	128	2.00	850	10

Cantilever CTC Light

懸臂式夾鉗 CTC 輕型

產品特性

C型設計可跨越式夾持，如夾持H型物件
懸臂握把設計使把手在工作範圍外，有利於使用施力
輕巧，僅100g
手柄: TPR
材質: 鋁合金

FEATURES

C-term design makes it' s possible to clamp workpieces like H beam.
Cantilever clamping action: The handle is out of work area.
Light Weight.
Soft Handle: Great touching by TPR.
Material of clamp body and jaw: Aluminium alloy.

CTC LIGHT SERIES

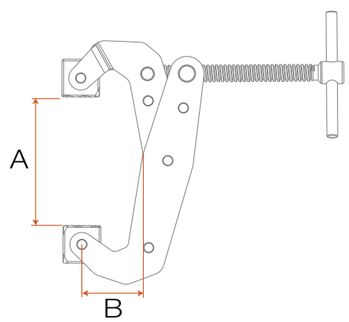

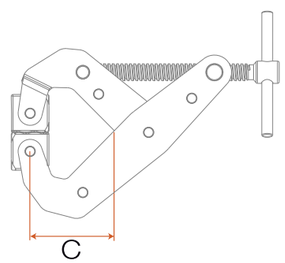

CTC-4.5/ CTC-6系列 CTC-4.5/ CTC-6 SERIES

型號 MODEL	跨距A SPAN A (inch/mm)	喉深B DEPTH B (mm)	喉深C DEPTH C (mm)	單重 WEIGHT (kg)	夾持力 PRESSURE (kg)	包裝 PACK (PCS)
CTC-2-AL	2"/ 50	33	42	0.10	200	50

C Clamp Serial CT/ BC/ CC/ UC

C型夾鉗 CT/BC/CC/UC系列

產品特性

材質：特殊合金鋼
C型夾系列：CT、CC、UC和BC。
CT：標準喉深
CC：喉深與跨距相同。
UC：長喉深。
BC：長跨距。

FEATURES

C clamps are made of the special alloy steel plus Nickel & Chrome plating.
EHOMA's C clamps are different with traditional, normal forged clamp.
Our C clamps have high steel quality, great look and perfect touch.
C clamp serial has four models-CT, CC, UC, BC.
CT is standard item. CC's throat depth is equal to span.
UC has more deep throat. BC has more long span.

CT SERIES

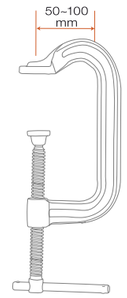

CT系列 CT SERIES

型號 MODEL	跨距 SPAN (inch)	跨距x喉深 SPAN X DEPTH (mm)	型鋼 RAIL (mm)	單重 WEIGHT (kg)	夾持力 PRESSURE (kg)	包裝 PACK (PCS)
CT2	2	50 X 50	19.5 X 9.5	0.44	1000	50
CT3	3	75 X 50	22.0 X 10.5	0.63	1300	30
CT4	4	100 X 60	25.0 X 12.0	1.02	1500	20
CT6	6	150 X 75	27.0 X 13.0	1.46	1800	10
CT8	8	200 X 90	30.0 X 15.0	2.29	2200	10
CT10	10	250 X 100	40.0 X 20.0	4.12	4000	5

BC SERIES

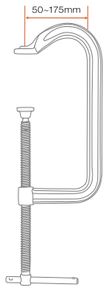

BC系列 BC SERIES

型號 MODEL	跨距 SPAN (inch)	跨距x喉深 SPAN X DEPTH (mm)	型鋼 RAIL (mm)	單重 WEIGHT (kg)	夾持力 PRESSURE (kg)	包裝 PACK (PCS)
BC4	4	100 X 50	19.5 X 9.5	0.55	900	40
BC5	5	125 X 65	19.5 X 9.5	0.63	850	36
BC6	6	150 X 75	22.0 X 10.5	0.93	1000	24
BC8	8	200 X 100	25.0 X 12.0	1.54	1000	12
BC10	10	75~250 X 115	27.0 X 13.0	2.07	1200	10
BC12	12	100~300 X 125	30.0 X 15.0	2.91	1500	8
BC14	14	100-350 X 150	36.0 X 18.0	4.64	1800	4
BC16	16	150~400 X 175	40.0 X 20.0	6.14	2000	2

CC SERIES

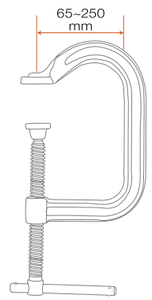

CC系列 CC SERIES

型號 MODEL	跨距 SPAN (inch)	跨距x喉深 SPAN X DEPTH (mm)	型鋼 RAIL (mm)	單重 WEIGHT (kg)	夾持力 PRESSURE (kg)	包裝 PACK (PCS)
CC2	2	50 X 65	19.5 X 9.5	0.46	700	40
CC3	3	75 X 80	22.0 X 10.5	0.74	850	30
CC4	4	100 X 100	25.0 X 12.0	1.20	1000	16
CC5	5	125 X 125	27.0 X 13.0	1.60	1000	12
CC6	6	150 X 150	30.0 X 15.0	2.40	1400	8
CC8	8	200 X 200	36.0 X 18.0	4.08	1500	4
CC10	10	250 X 250	40.0 X 20.0	5.94	1500	2

UC SERIES

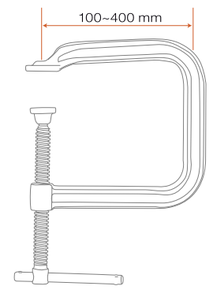

UC系列 UC SERIES

型號 MODEL	跨距 SPAN (inch)	跨距x喉深 SPAN X DEPTH (mm)	型鋼 RAIL (mm)	單重 WEIGHT (kg)	夾持力 PRESSURE (kg)	包裝 PACK (PCS)
UC2	2	50 X 100	19.5 X 9.5	0.56	600	40
UC3	3	75 X 125	22.0 X 10.5	0.86	600	24
UC4	4	100 X 160	25.0 X 12.0	1.40	650	12
UC5	5	125 X 200	27.0 X 13.0	1.95	700	10
UC6	6	150 X 250	30.0 X 15.0	2.96	800	6
UC8	8	200 X 350	36.0 X 18.0	5.36	850	4
UC10	10	250 X 400	40.0 X 20.0	7.45	1000	2

Multi-Function Assembling Serial Clamp Deep Throat
深喉組合式夾鉗

產品特性

本系列夾鉗由於喉深較深，為運送方便與降低庫存空間，因此須由使用者自行組裝(使用十字起子即可)。
本系列有兩種壓蓋，簡易壓蓋經濟實惠，多功能壓蓋可配合不同作業更換成更合適之表面幫助夾持。
27型鋼以上之產品其T柄與六角尾端皆可透過其他工具輔助，便於加強施力。
多功能壓蓋的標準品附平面壓蓋，可因物品表面形狀不同搭配不同需求之壓蓋使用。
另兩種可換式壓蓋為選購配件R-PAD增加摩擦力,V-PAD適合圓弧表面之夾持。
本系列夾鉗分別由三個組件組成，固定臂DFA、移動臂(DSAT)、本體(PR)。

DFA

Fixed Arm

DSAT

Sliding Arm + T-Handle

DFA + DSAT = DSFAT

PR

Post Rail

Size: 200mm ~ 1000mm

FEATURES

Deep throat set clamp (DT) can match users' demand function. You can assemble it by yourself just as expanding or span longer.
You have some options to buy any other parts that you demand.

There are 3 parts of Deep throat set clamp. Those are Sliding Arm + T-handle(DSAT), and Post Rail(PR).

CHANGEABLE

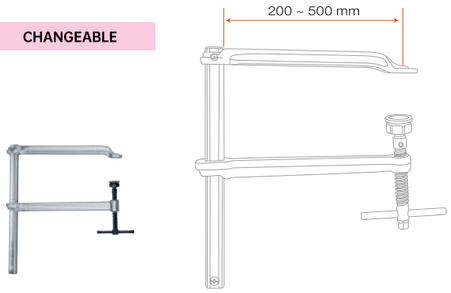

UNCHANGEABLE

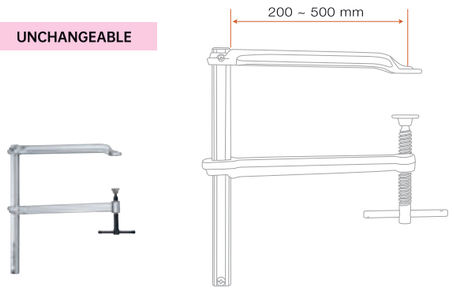

多功能壓蓋系列 MULTIPLE PAD SERIES

型號 MODEL	跨距x喉深 SPAN X DEPTH (mm)	型鋼 RAIL (mm)	單重 WEIGHT (kg)	夾持力 PRESSURE (kg)	包裝 PACK (PCS)
D22T20J	200 X 200	22.0 X 10.5	1.65	300	4
D25T25J	250 X 250	25.0 X 12.0	2.57	340	
D27T30J	300 X 300	27.0 X 13.0	3.39	340	
D30T36J	300 X 360	30.0 X 15.0	4.85	450	
D36T30J	300 X 300	36.0 X 18.0	5.90	850	
D36T40J	400 X 400	36.0 X 18.0	7.21	650	2
D36T50J	400 X 500	36.0 X 18.0	8.55	450	

簡易壓蓋系列 LIGHT PAD SERIES

型號 MODEL	跨距x喉深 SPAN X DEPTH (mm)	型鋼 RAIL (mm)	單重 WEIGHT (kg)	夾持力 PRESSURE (kg)	包裝 PACK (PCS)
D22T20	200 X 200	22.0 X 10.5	1.53	300	4
D25T25	250 X 250	25.0 X 12.0	2.40	340	
D27T30	300 X 300	27.0 X 13.0	3.27	340	
D30T36	300 X 360	30.0 X 15.0	4.63	450	
D36T30	300 X 300	36.0 X 18.0	5.68	850	
D36T40	400 X 400	36.0 X 18.0	7.00	650	2
D36T50	400 X 500	36.0 X 18.0	7.89	450	

Multi-Function Assembling Serial Clamp Deep Throat
深喉組合式夾鉗

配件 PARTS

更換步驟簡單。標準附件為P-墊，V-Pad和R-Pad是可選的

Easy replacement step.
The standard accessory is P-Pad.The V-Pad and R-Pad are optional

P墊
P-Pad

V墊
V-Pad

R墊
R-Pad

DSFAT-J SERIES

DSFAT SERIES

多功能壓蓋之伸長臂系列 DEEP THROAT PART DSFAT-J SERIES

型號 MODEL	喉深 DEPTH (mm)	型鋼 RAIL (mm)	單重 WEIGHT (kg)	包裝 PACK (PCS)
DSFAT222J	200	22.0 X 10.5	1.16	4
DSFAT252J	250	25.0 X 12.0	1.82	
DSFAT273J	300	27.0 X 13.0	2.30	
DSFAT303J	360	30.0 X 15.0	3.50	
DSFAT363J	300	36.0 X 18.0	3.99	
DSFAT364J	400	36.0 X 18.0	4.86	
DSFAT365J	500	36.0 X 18.0	5.75	

簡易壓蓋之伸長臂系列 DEEP THROAT PART DSFAT SERIES

型號 MODEL	喉深 DEPTH (mm)	型鋼 RAIL (mm)	單重 WEIGHT (kg)	包裝 PACK (PCS)
DSFAT222	200	22.0 X 10.5	1.09	4
DSFAT252	250	25.0 X 12.0	1.67	
DSFAT273	300	27.0 X 13.0	2.22	
DSFAT303	360	30.0 X 15.0	3.28	
DSFAT363	300	36.0 X 18.0	3.78	
DSFAT364	400	36.0 X 18.0	4.65	
DSFAT365	500	36.0 X 18.0	5.54	

POST RAIL SERIES

本體型鋼系列 POST RAIL SERIES

型號 MODEL	型鋼 RAIL (mm)	單重 WEIGHT (kg)	包裝 PACK (PCS)
PR27100	27.0 X 13.0	2.77	1
PR30100	30.0 X 15.0	3.57	
PR36030	36.0 X 18.0	1.90	
PR36040	36.0 X 18.0	2.40	
PR36050	36.0 X 18.0	2.80	
PR36100	36.0 X 18.0	5.02	

Multi-Function Assembling Serial Clamp Joint Block

夾鉗延伸配件 連接器CJB系列

產品特性

接桿CR與連接器CJB兩項產品為F型夾鉗是相關配件，功能為延伸本體長度，增加可夾持距離。
可適用於原本EHOMA型鋼27(含)以上之任何F型產品。
延伸時，CR須與CJB互相搭配使用此外，接桿CR亦可搭配伸長臂手柄組組合使用，成為變形之夾鉗，可往內夾持亦可向外支撐。

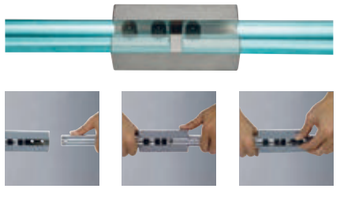

FEATURES

Connection Joint Block is designed for longer span demands. You can assemble EHOMA original clamp with connecting joint block to make the frame longer.
Usually, connecting joint block is used with one connecting rod, but it also can connect more than one connecting rod.
For example, if you need a 270cm span clamp, you may assemble SG80C x 1 + CJB27 x 2 + CR27100 x 2 to fit your demand.

JOINT BLOCK SERIES

連接器系列 JOINT BLOCK SERIES			
型號 MODEL	適用型鋼 USE RAIL SIZE (mm)	單重 WEIGHT (kg)	包裝 PACK (PCS)
CJB27	27.0 X 13.0	1.04	1
CJB30	30.0 X 15.0	0.96	
CJB36	36.0 X 18.0	1.63	
CJB40	40.0 X 20.0	1.52	

Multi-Function Assembling Serial Clamp Easy Combination

夾鉗延伸配件 接桿CR系列

產品特性

接桿CR與連接器CJB兩項產品為F型夾鉗是相關配件，功能為延伸本體長度，增加可夾持距離。
可適用於原本EHOMA型鋼27(含)以上之任何F型產品。
延伸時，CR須與CJB互相搭配使用此外，接桿CR亦可搭配伸長臂手柄組組合使用，成為變形之夾鉗，可往內夾持亦可向外支撐。

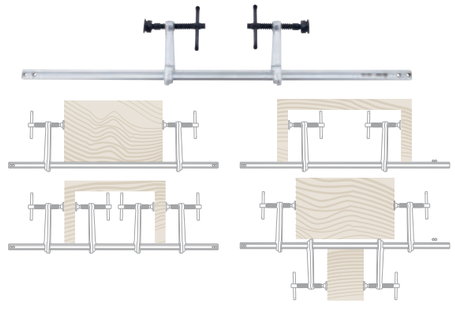

FEATURES

Connecting rod or post rail also can be used without a connecting joint block.
It can assemble with 2 sets of clamp parts (Arm + Handle) for more directions using, such as inward or outward clamping.

Note: Rail is the keypoint.
For example 1: PR27100 x 1pcs + CTL30A x 2pcs
For example 2: PR30100 x 1pcs + 3025ASR x 2pcs

CONNECTING ROD SERIES

連接器系列 JOINT BLOCK SERIES			
型號 MODEL	適用型鋼 USE RAIL SIZE (mm)	單重 WEIGHT (kg)	包裝 PACK (PCS)
CR27100	27.0 X 13.0	2.44	1
CR30100	30.0 X 15.0	3.16	
CR36100	36.0 X 18.0	4.44	
CR40100	40.0 X 20.0	5.54	

Clamp Cantilever F

懸臂式F型夾鉗系列

產品特性

專為各種需內外撐的應用而設計。
簡單地調整內爪角度即可改變夾持方向。
懸臂式設計能以最省力的方式得到最大夾持力。
夾持力是以跨距150mm做測試。
CTD和CTV壓蓋為選配件。

CTD-Pad

CTV-Pad

FEATURES

It is specifically designed for clamping inward and outward to meet various clamping applications.
Simply changing the slide-in direction of the sliding arm can shift such clamping direction.
The cantilever helps to obtain maximum clamping pressure with minimum tightening force.
The clamping pressure is measured at the span of 150mm.
The clamping block of CTD and CTV are optional accessories.
(Page 107-108).

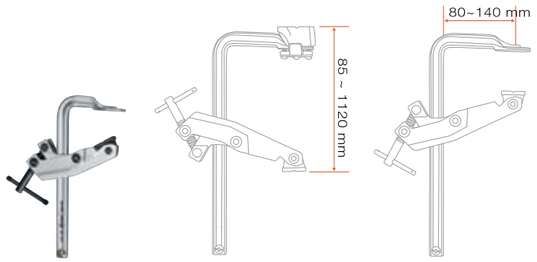

懸臂式F型夾鉗系列 CANTILEVER F SERIES

型號 MODEL	跨距x喉深 SPAN X DEPTH (mm)	型鋼 RAIL (mm)	單重 WEIGHT (kg)	夾持力 PRESSURE (kg)	包裝 PACK (PCS)
CTL-15	150 X 80	22.0 X 10.5	1.36	600	10
CTL-20	200 X 80		1.44		
CTL-50	500 X 80		1.93		
CTL-80	800 X 80		2.42		
CTL-30	300 X 100	27.0 X 13.0	2.72	700	6
CTL-60	600 X 100		3.46		
CTL-100	1000 X 100		4.41		
CTL-30-14	300 X 140	27.0 X 13.0	2.90	600	6
CTL-60-14	600 X 140		3.67		
CTL-100-14	1000 X 140		4.65		

Hurdle-Free Light Pad/ Multiple Pad

簡易壓蓋型系列/多功能壓蓋型系列

產品特性

本系列產品可克服(適用於)H型鋼、U型鋼、或者凹槽之固定(夾持)需求，多使用於鐵工、鋼構、焊接、造船、建築等。
27型鋼以上之產品其T柄與六角尾端皆可透過其他工具輔助，便於加強施力。更換壓蓋後可適用於圓弧表面之固定物。

FEATURES

The U-term design makes it handy in clamping H beam for welding.
Easy to operate and applicable to all types of H beam.
The clamping pressure is measured at the span of 150mm.

多功能壓蓋型系列 MULTIPLE SERIES

Easy replacement step.The standard accessory is P-Pad. The V-Pad and R-Pad are optional

Use hexagon socket wrench to strengthen for applying force

P墊
P-Pad

V墊
V-Pad

R墊
R-Pad

UNCHANGEABLE

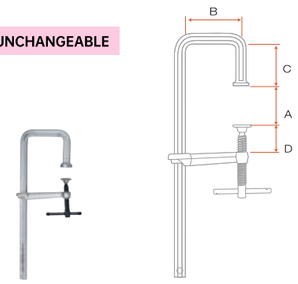

MULTIPLE

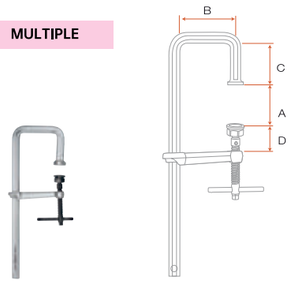

簡易壓蓋型系列 LIGHT PAD SERIES

型號 MODEL	跨距x喉深 SPAN X DEPTH (AXBmm)	C U-Turn (mm)	D OVERPASS HEIGHT (mm)	型鋼 RAIL (mm)	單重 WEIGHT (kg)	夾持力 PRESSURE (kg)	包裝 PACK (PCS)
H25U6S	250 X 120	60	90	22.0 X 10.5	1.50	550	10
H30U10S	300 X 140	100	100	25.0 X 12.0	2.35	650	10
H30U11S	300 X 140	110	115	30.0 X 15.0	3.38	1100	6
H50U11S	500 X 140				4.02		
H30U15S	300 X 175	150	130	40.0 X 20.0	6.80	2200	2
H40U15S	400 X 175				7.38		
H50U15S	500 X 175				7.94		

多功能壓蓋型系列 MULTIPLE SERIES

型號 MODEL	跨距x喉深 SPAN X DEPTH (AXBmm)	C U-Turn (mm)	D OVERPASS HEIGHT (mm)	型鋼 RAIL (mm)	單重 WEIGHT (kg)	夾持力 PRESSURE (kg)	包裝 PACK (PCS)
H25U6	250 X 120	60	90	22.0 X 10.5	1.58	550	10
H30U10	300 X 140	100	100	25.0 X 12.0	2.46	650	10
H30U11	300 X 140	110	115	30.0 X 15.0	3.67	1100	6
H50U11	500 X 140				4.28		
H30U15	300 X 175	150	130	40.0 X 20.0	7.20	2200	2
H40U15	400 X 175				7.72		
H50U15	500 X 175				8.28		

Hurdle-Free Quick Lever
速捷型系列

產品特性

本系列產品可克服(適用於)H型鋼、U型鋼、或者凹槽之固定(夾持)需求，多使用於鐵工、鋼構、焊接、造船、建築等。
藍色烤漆手把為鋅合金，棘輪式設計，可在最短時間夾緊、鬆放，節省人工成本，增加工作效率。

FEATURES

The U-term design makes it handy in clamping H beam for welding.
Easy to operate and applicable to all types of H beam.
The clamping pressure is measured at the span of 150mm.

速捷型系列 QUICK LEVER SERIES:

Ratchet type lever prevents overloading and resists vibration.
For high pressure, fast action clamping purpose.
The soft pad for quick lever is optional .

Soft Pad For Quick Lever

QUICK LEVER SERIES

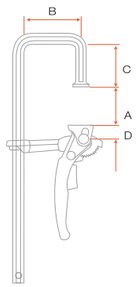

速捷型系列 QUICK LEVER SERIES							
型號 MODEL	寬x深x高 SPAN X DEPTH (AXBmm)	C U-Turn (mm)	D OVERPASS HEIGHT (mm)	型鋼 RAIL (mm)	單重 WEIGHT (kg)	夾持力 PRESSURE (kg)	包裝 PACK (PCS)
H25U6L	250 X 120	60	10	22.0 X 10.5	1.78	400	10
H30U10L	300 X 140	100	12	25.0 X 12.0	2.80	500	10

F Clamp Parts & Accessories
F鉗零配件

Arm & Spindle With Wooden Handle & Pad
伸長臂與木柄及簡易壓蓋

型號 MODEL	適用 APPLICABLE	適合於型鋼&喉深 SUIT TO RAIL & DEPTH
1105ASW	G10C	11.5mm & 50mm
1306ASW	G12C	13.5mm & 60mm
1608ASW	G16C	16.0mm & 80mm
1910ASW	G20C	19.5mm & 100mm
2212ASW	G25C	22.0mm & 120mm
2514ASW	G30C	25.0mm & 140mm
2512ASW	SG40C	25.0mm & 120mm
2712ASW	SG80C	27.0mm & 120mm
2717ASW	G40C	27.0mm & 175mm
3020ASW	WD30T20	30.0mm & 200mm
3025ASW	WD40T25	30.0mm & 250mm

Arm & Spindle With T-Bar & Pad
伸長臂與T型手柄及簡易壓蓋

型號 MODEL	適用 APPLICABLE	適合於型鋼&喉深 SUIT TO RAIL & DEPTH
1105AST	G10CS	11.5mm & 50mm
1306AST	G12CS	13.5mm & 60mm
1608AST	G16CS	16.0mm & 80mm
1910AST	G20CS	19.5mm & 100mm
2212AST	G25CS	22.0mm & 120mm
2514AST	G30CS	25.0mm & 140mm
2512AST	SG40CS	25.0mm & 120mm
2712AST	SG80CS	27.0mm & 120mm
2717AST	G40CS	27.0mm & 175mm
3012AST	GSE25	30.0mm & 120mm
3020AST	SD30T20	30.0mm & 200mm
3025AST	SD40T25	30.0mm & 250mm

Arm & Spindle With Wooden Handle & Pad
伸長臂與塑膠柄及簡易壓蓋

型號 MODEL	適用 APPLICABLE	適合於型鋼&喉深 SUIT TO RAIL & DEPTH
1105ASP	G10P	11.5mm & 50mm
1306ASP	G12P	13.5mm & 60mm
1608ASP	G16P	16.0mm & 80mm
1910ASP	G20P	19.5mm & 100mm
2212ASP	G25P	22.0mm & 120mm
2514ASP	G30P	25.0mm & 140mm
2512ASP	SG40P	25.0mm & 120mm
2712ASP	SG80P	27.0mm & 120mm
2717ASP	G40P	27.0mm & 175mm
3020ASP	PD30T20	30.0mm & 200mm
3025ASP	PD40T25	30.0mm & 250mm

Arm & Spindle With Strong-Hold T-Bar & P Pad
伸長臂與T型手柄及多功能平面壓蓋

型號 MODEL	適用 APPLICABLE	適合於型鋼&喉深 SUIT TO RAIL & DEPTH
1906AST-P	M15C6	19.5mm & 60mm
1910AST-P	S20C	19.5mm & 100mm
2208AST-P	M20C8	22mm & 80mm
2212AST-P	S25C	22mm & 120mm
2510AST-P	M25C10	25mm & 100mm
2512AST-P	S40C	25mm & 120mm
2514AST-P	S30C	25mm & 140mm
2708AST-P	MS25C8	27mm & 80mm
2712AST-P	S20C12	27mm & 120mm
3010AST-P	MS30C10	30mm & 100mm
3012AST-P	GS25C	30mm & 120mm
3014AST-P	GS30C	30mm & 140mm
3616AST-P	GM30C	36mm & 160mm
4012AST-P	MS50C12	40mm & 120mm
4017AST-P	SS30C	40mm & 175mm

Arm & Spindle with Pivot Handle & Pad
伸長臂與好用型雙色手柄及簡易壓蓋

型號 MODEL	適用 APPLICABLE	適合於型鋼&喉深 SUIT TO RAIL & DEPTH
1608ASR	REG16C	16.0mm & 80mm
1910ASR	REG20C	19.5mm & 100mm
2212ASR	REG25C	22.0mm & 120mm
2514ASR	REG30C	25.0mm & 140mm
2512ASR	RESG40C	25.0mm & 120mm
2712ASR	RESG80C	27.0mm & 120mm
2717ASR	REG40C	27.0mm & 175mm
3020ASR	RD30T20	30.0mm & 200mm
3025ASR	RD40T25	30.0mm & 250mm

Arm & Spindle with Strong Grip T-Bar & Pad
伸長臂與T型手柄及虎齒壓蓋

型號 MODEL	適用 APPLICABLE	適合於型鋼&喉深 SUIT TO RAIL & DEPTH
1906ASTR	S15C6	19.5mm & 60mm
2208ASTR	S20C8	22.0mm & 80mm
2510ASTR	S20C10	25.0mm & 100mm
2708ASTR	SP15C8	27.0mm & 80mm
3010ASTR	SP20C10	30.0mm & 100mm
4012ASTR	SP30C12	40.0mm & 120mm

F Clamp Parts & Accessories

F鉗零配件

Sliding Arm & Handle Set

N系列鑄造伸長臂與木柄及簡易壓蓋

型號 MODEL	適用 APPLICABLE	適合於型鋼&喉深 SUIT TO RAIL & DEPTH
1505NA	NA	15x5mm & 50mm
2006NA	NB	20x5mm & 60mm
2508NA	NC	25x6mm & 80mm
2710NA	ND	27x7mm & 100mm
2912NA	NE	29x9mm & 120mm
3214NA	NF	32x10mm & 140mm
3217NA	NF	32x10mm & 175mm

Sliding Arm & Handle Set

滑動臂及手柄

型號 MODEL	適用 APPLICABLE	適合於型鋼&喉深 SUIT TO RAIL & DEPTH
CTL15A	CTL-15	22.0mm & 80mm
CTL30A	CTL-30	27.0mm & 100mm
CTL3014A	CTL30-14	27.0mm &140mm

Arm & Lever Handle

棘輪伸長臂與速捷柄

型號 MODEL	適用 APPLICABLE	適合於型鋼&喉深 SUIT TO RAIL & DEPTH
1306AL	G12L	13.5mm & 60mm
1608AL	G16L	16.0mm & 80mm
1910AL	G20L	19.5mm & 100mm
2212AL	G25L	22.0mm & 120mm
2514AL	G30L	25.0mm & 140mm
2512AL	G40L	25.0mm & 120mm
2712AL	G80L	27.0mm & 120mm

Arm & Spindle With 2-Way Ratchet handle

型號 MODEL	適用 APPLICABLE	適合於型鋼 SUIT TO RAIL
2512ASK	SG40R	Suit to rail 25 mm
2514ASK	G30R	Suit to rail 25 mm
2712ASK	SG80R	Suit to rail 27 mm
2717ASK	G40R	Suit to rail 27 mm
3012ASK	GSE25R	Suit to rail 30 mm
3014ASK	GSI25R	Suit to rail 30 mm
3020ASK	SD30T20R	Suit to rail 30 mm
3025ASK	SD30T25R	Suit to rail 30 mm

Sliding Arm

型號 MODEL	適用 APPLICABLE	適合於型鋼 SUIT TO RAIL
1608RA	Reverse f clamp	16 mm

Arm & Spindle With Wooden Handle & Pad

W系列鑄造伸長臂與木柄及簡易壓蓋

型號 MODEL	適用 APPLICABLE	適合於型鋼&喉深 SUIT TO RAIL & DEPTH
2508W	WA10	25x6mm & 80mm
3010W	WB20	30x8mm & 100mm
3012W	WB30	30x8mm & 120mm
3512WC	WC30	35x9mm & 120mm
3514W	WC40	35x9mm & 140mm
3517W	WC50	35x9mm & 175mm
3512WD	WD30	35x11mm & 120mm
3520W	WD60	35x11mm & 200mm
3525W	WD70	35x11mm & 250mm

Arm & Spindle With T-handle & Pad

F系列鑄造伸長臂與T柄及簡易壓蓋

型號 MODEL	適用 APPLICABLE	適合於型鋼&喉深 SUIT TO RAIL & DEPTH
2508T	FA10	25x6mm & 80mm
3010T	FB20	30x8mm & 100mm
3012T	FB30	30x8mm & 120mm
3512TC	FC30	35x9mm & 120mm
3514T	FC40	35x9mm & 140mm
3517T	FC50	35x9mm & 175mm
3512TD	FD30	35x11mm & 120mm
3520T	FD60	35x11mm & 200mm
3525T	FD70	35x11mm & 250mm

Arm & Spindle With 2-Way Ratchet handle & P Pad Set

型號 MODEL	適用 APPLICABLE	適合於型鋼 SUIT TO RAIL
2510ASK-P	M25R10	25 mm
2512ASK-P	S40R	25 mm
2514ASK-P	S30R	25 mm
2708ASK-P	MS25R8	27 mm
2712ASK-P	S20R12	27 mm
2717ASK-P	S30R175	27 mm
3010ASK-P	MS30R10	30 mm
3012ASK-P	GS25R	30 mm
3014ASK-P	GS30R	30 mm

2-Way Ratchet Handle

NEW

型號 MODEL	適用 APPLICABLE	適合於型鋼 SUIT TO RAIL
27KH SET	all ratchet handle	25, 27, 30 mm

F Clamp Parts & Accessories

F鉗零配件

Sliding Arm and Pivot handle

型號 MODEL	適用 APPLICABLE
2909PJHR	PJH Series Clamp

Sliding Arm and Component handle

型號 MODEL	適用 APPLICABLE
2909PJHP	PJH Series Clamp

Top Arm with Diamond Handle

型號 MODEL	適用 APPLICABLE	適合於型鋼 SUIT TO RAIL
1608RAH	Reverse f clamp	16 mm

Spindle and T-Handle

T型手柄(含角牙)適用多功能壓蓋

型號 MODEL	適用 APPLICABLE	適合於型鋼 SUIT TO RAIL
22ST-H	S20C	19.5, 22mm
27ST-H	S20C12	25, 27mm
30ST-H	GS25C	30mm
40ST-H	SS30C	36, 40mm

Spindle And Plastic Hanle

塑柄及角牙

型號 MODEL	適用 APPLICABLE	適合於型鋼 SUIT TO RAIL
10PH	G10P	11.5, 15x5mm
12PH	G12P	13.5, 20x5mm
14PH	G16P	16.0, 25x6mm
16PH	G20P	19.5, 22, 30x8, 27x7, 29x9mm
18PH	G30P	25.0, 27.0, 30.0, 35x9, 35x11, 32x10mm

Spindle And Wooden Hanle

木柄及角牙

型號 MODEL	適用 APPLICABLE	適合於型鋼 SUIT TO RAIL
10WH	G10C	11.5, 15x5mm
12WH	G12C	13.5, 20x5mm
14WH	G16C	16.0, 25x6mm
16WH	G20C	19.5, 22, 30x8, 27x7, 29x9mm
18WH	G30C	25.0, 27.0, 30.0, 35x9, 35x11, 32x10 mm

Sliding Arm and Component handle

型號 MODEL	適用 APPLICABLE
2008PJP	PJ Series Clamp

Sliding Arm and wood handle

型號 MODEL	適用 APPLICABLE
2008PJW	PJ Series Clamp

Spindle and T-Handle

T型手柄(含角牙)適用多功能壓蓋

型號 MODEL	適用 APPLICABLE	適合於型鋼 SUIT TO RAIL
10TH	G10CS	11.5mm
12TH	G12CS	13.5mm
14TH	G16CS	16.0mm
16TH	G20CS	19.5, 22.0 mm
18TH	G30CS	25.0, 27.0mm
20TH	GSE20	30.0mm
22TH	SP30C12	40.0 mm
14TB	FA	25x6mm
16TB	FB	30x8mm
18TB	FC,FD	35x9, 35x11 mm

Arm and Diamond Handle

型號 MODEL	適用 APPLICABLE	適合於型鋼 SUIT TO RAIL
1608R SET	Reverse f clamp	16 mm

Spindle and Pad for Pivot Handle

型號 MODEL	適用 APPLICABLE	適合於型鋼 SUIT TO RAIL
16RS-P	REG16C	16.0mm
19RS-P	REG20C	19.5, 22.0mm
25RS-P	REG30C	25.0, 27.0 mm

Spindle for multiple pad/ 2-way Ratchet Handle

型號 MODEL	適用 APPLICABLE	適合於型鋼 SUIT TO RAIL
27KS	S30R	25, 27 mm
30KS	GS25R	30 mm

F Clamp Parts & Accessories

F鉗零配件

Spindle and Pad for 2-way Ratchet Handle

型號 MODEL	適用 APPLICABLE	適合於型鋼 SUIT TO RAIL
27KS-P	G30R	25, 27 mm
30KS-P	GSE25R	30 mm

Pivot Handle Set

(Includes handle, pin, ball, spring)

活動塑料柄(包括手柄、銷、滾珠軸承、彈簧)

型號 MODEL	適用 APPLICABLE	適合於型鋼 SUIT TO RAIL
14R SET	REG16C	16.0mm
16R SET	REG20C	19.5, 22.0mm
18R SET	REG30C	25.0, 27.0mm

Lever Handle Set

(Includes Lever, Handle, Trigger Set)

速捷柄(包括控制桿、手柄)

型號 MODEL	適用 APPLICABLE	適合於型鋼 SUIT TO RAIL
12L SET	G12L	13.5, 16.0mm
20L SET	G20L	19.5mm
25L SET	G25L	22.0mm
30L SET	G30L	25.0, 27.0mm

CTV Pad

型號 MODEL	適合於型鋼 SUIT TO RAIL
CTV	22, 27mm

PJH Stopper

型號 MODEL	適用 APPLICABLE
PJHSP	Suit to PJH series clamp

PJH Platform

型號 MODEL	適用 APPLICABLE
PJHSP	PJH series clamp

Swivel for pivot handle

型號 MODEL	適用 APPLICABLE
18SWV	Suit to 18R Set. & PJH-R

C-Ring Pad For General Purpose Clamps Replacement

NEW

型號 MODEL	適用 APPLICABLE	適合於型鋼 SUIT TO RAIL
11CPad	G12C Pad	13.5 mm
16CPad	G16C Pad	16 mm
19CPad	G20C Pad	19.5, 22 mm
25CPad	G30C Pad	25, 27 mm
30CPad	GSE Pad	30 mm

Pad For General Purpose

型號 MODEL	適用 APPLICABLE	適合於型鋼 SUIT TO RAIL
11Pad	G10C Pad	11.5, 13.5 mm
16Pad	G16C Pad	16.0 mm
19Pad	G20C Pad	19.5, 22.0 mm
25Pad	G30C Pad	25.0, 27.0 mm
30Pad	GSE Pad	30.0 mm

Trigger Set

(Includes Trigger, Spring, Pivot and wahser)

型號 MODEL	適用 APPLICABLE	適合於型鋼 SUIT TO RAIL
12L trigger set	G12L	13.5, 16.0mm
20L trigger set	G20L	19.5mm
25L trigger set	G25L	22.0mm
30L trigger set	G30L	25.0, 27.0mm

CTD Pad

型號 MODEL	適合於型鋼 SUIT TO RAIL
CTD-1	22mm
CTD-2	27mm

V Pad

型號 MODEL	適合於型鋼 SUIT TO RAIL
S20C-V	V-Pad19.5, 22mm
SC-V	V-Pad 25, 27mm
GS-V	V-Pad 30, 36, 40mm

P.P. Pad

PP護套

型號 MODEL	適用 APPLICABLE	適合於型鋼 SUIT TO RAIL
13L PPP	G12L, G12KL	13.5, 16.0mm
19L PPP	G20L, G25L	19.5, 22.0mm
25L PPP	G30L, G40L, G80L…	25.0, 27.0mm

F Clamp Parts & Accessories

F鉗零配件

Nut

螺帽

型號 MODEL	螺帽用於型鋼 NUT FOR RAIL
S20C-N	19.5, 22mm
SC-N	25, 27mm
GS-N	30, 36, 40mm

Joint

圓球接頭

型號 MODEL	接頭用於型鋼 JOINT FOR RAIL
S20C-J	19.5, 22mm
SC-J	25, 27mm
GS-J	30, 36, 40mm

P Pad

型號 MODEL	適合於型鋼 SUIT TO RAIL
S20C-P	P-Pad for rail 19.5, 22mm
SC-P	P-Pad for rail 25, 27mm
GS-P	P-Pad for rail 30, 36, 40mm

R Pad

型號 MODEL	適合於型鋼 SUIT TO RAIL
S20C-R	R-Pad for rail 19.5, 22mm
SC-R	R-Pad for rail 25, 27mm
GS-R	R-Pad for rail 30, 36, 40mm

PJH PAD

螺帽

型號 MODEL	適用 APPLICABLE
PJHCP	PJH series clamp

P.P. Pad

PP護套

型號 MODEL	適用 APPLICABLE	適合於型鋼 SUIT TO RAIL
13PPP	G12C/G12CS	13.5 mm
16PPP	G16C/G16CS/REG16C/FA/WA	16.0 mm
19PPP	G20C/G20CS/REG20C/	19.5 mm
22PPP	G25C/G25CS/REG25C/FB/WB	22.0 mm
25PPP	G30C/G30CS/REG30C/FC/WC	25.0 mm
27PPP	SG80C/SG80CS/RESG80C/FD/WD	27.0 mm

P Pad Set

Includes Joint, Pin, Nut, Pad

P壓蓋(包括圓球接頭,銷,螺帽,壓蓋)

型號 MODEL	適合於型鋼 SUIT TO RAIL
S20CP Set	P-Pad for rail 19.5, 22mm
SCP Set	P-Pad for rail 25, 27mm
GSP Set	P-Pad for rail 30, 36, 40mm

R Pad Set

Includes Joint, Pin, Nut, Pad

R壓蓋(包括圓球接頭,銷,螺帽,壓蓋)

型號 MODEL	適合於型鋼 SUIT TO RAIL
S20CR Set	R-Pad for rail 19.5, 22mm
SCR Set	R-Pad for rail 25, 27mm
GSR Set	R-Pad for rail 30, 36, 40mm

V Pad Set

Includes Joint, Pin, Nut, Pad

V壓蓋(包括圓球接頭,銷,螺帽,壓蓋)

型號 MODEL	適合於型鋼 SUIT TO RAIL
S20CV Set	V-Pad for rail 19.5, 22mm
SCV Set	V-Pad for rail 25, 27mm
GSV Set	V-Pad for rail 30, 36, 40mm

R-Pad For Strong Grip

型號 MODEL	適用 APPLICABLE	適合於型鋼 SUIT TO RAIL
22RPad	S20C8 Pad	19.5, 22.0 mm
25RPad	S20C10 Pad	25.0, 27.0 mm
40RPad	SP25C10 Pad	30.0, 40.0 mm

PJ Stopper

型號 MODEL	適用 APPLICABLE
PJSP	PJ series clamp

P.P. Pad

PP護套

型號 MODEL	適用 APPLICABLE	適合於型鋼 SUIT TO RAIL
A PPP	NA	15X5 mm
B PPP	NB	20X5 mm
C PPP	NC	25X6 mm
D PPP	ND	27X7 mm
E PPP	NE	29X9 mm
F PPP	NF	32X10 mm

Accessories
配件系列

Flat Cushion-tip Bonded Neoprene Cap
橡膠頭螺栓

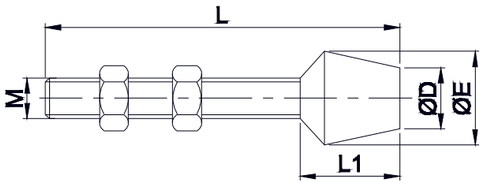

型號 MODEL	M	L	L1	D	E
CH-FC-042507	M4x0.7	25	11.5	10.5	13.5
CH-FC-044207	M4x0.7	42	11.5	10.5	13.5
CH-FC-053808	M5x0.8	38	11.5	10.5	13.5
CH-FC-10138	3/16"-24	1-3/8"(35)	11.5	10.5	13.5
CH-FC-064410	M6x1.0	44	14	10	15
CH-FC-065110	M6x1.0	51	14	10	15
CH-FC-14134	1/4"-20	1-3/4"(45)	14	10	15
CH-FC-14218	1/4"-20	2-1/8"(54)	14	10	15
CH-FC-086312	M8x1.25	63	19	13	18.5
CH-FC-087512	M8x1.25	75	19	13	18.5
CH-FC-56212	5/16"-18	2-1/2"(63)	19	13	18.5
CH-FC-56300	5/16"-18	3"(76)	19	13	18.5
CH-FC-108515	M10x1.5	85	24.5	15	23
CH-FC-38312	3/8"-16	3-1/2"(89)	24.5	15	23
CH-FC-38412	3/8"-16	4-1/2"(114)	24.5	15	23
CH-FC-38334	3/8"-16	3-3/4"(95)	24.5	15	23
CH-FC-38316	3/8"-16	3-1/6"(80)	20	30	35
CH-FC-121017	M12x1.75	100	27	25	30.5

Swivel Foot Adjustable Spindle Assemblies
壓頭可擺動調節螺栓

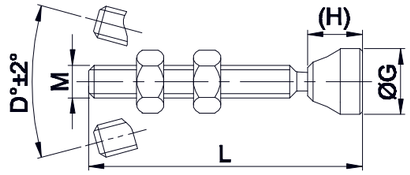

型號 MODEL	M	L	H	G	D
CH-SF-05035	M5x0.8	35	10	12	23
CH-SF-06050	M6x1.0	50	10	12	30
CH-SF-08065	M8x1.25	65	13	20	20
CH-SF-10085	M10x1.5	85	15	20	30
CH-SF-12100	M12x1.75	100	20	25	20
CH-SF-16150	M16x2.0	150	30	45	25
CH-SF-14214	1/4"-20	2-1/4"(57)	9.3	12.7	28
CH-SF-56234	5/16"-18	2-3/4"(69)	10.2	14	24
CH-SF-38300	3/8"-16	3"(76)	26	16	26
CH-SF-12400	1/2"-12	4"(100)	30	25.4	24

Standard Adjustable
鐵頭螺栓

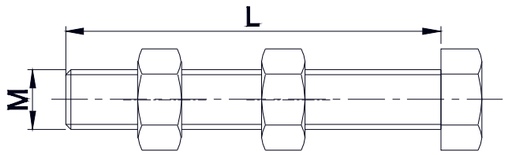

型號 MODEL	M	L	型號 MODEL	M	L
CH-SA-041507	M4x0.7	15	CH-SA-10118	3/16"-24	1-1/8"(28)
CH-SA-042007	M4x0.7(nylon)	20	CH-SA-08034	5/32"-32(nylon)	3/4"(19)
CH-SA-042507	M4x0.7	25	CH-SA-14112	1/4"-20	1-1/2"(38)
CH-SA-044007	M4x0.7	40	CH-SA-14134	1/4"-20	1-3/4"(45)
CH-SA-051508	M5x0.8	15	CH-SA-56200	5/16"-18	2"(50)
CH-SA-053008	M5x0.8	30	CH-SA-56212	5/16"-18	2-1/2"(63)
CH-SA-064010	M6x1.0	40	CH-SA-38300	3/8"-16	3"(76)
CH-SA-065010	M6x1.0	50	CH-SA-38400	3/8"-16	4"(100)
CH-SA-083012	M8x1.25	30	CH-SA-12300	1/2"-12	3"(76)
CH-SA-085012	M8x1.25	50	CH-SA-12412	1/2"-12	4-1/2"(114)
CH-SA-086512	M8x1.25	65	CH-SA-58500	5/8"-11	5"(127)
CH-SA-105015	M10x1.5	50	CH-SA-109015	M10x1.5	90
CH-SA-107515	M10x1.5	75	CH-SA-125017	M12x1.75	50

Accessories
配件系列

Flange Washer
華司

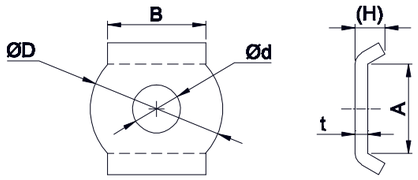

型號 MODEL	D	d	A	B	H	t	FOR SPINDLE
CH-FW-080	12	4.3	8.3	8	3.2	1.0	M4 or #8
CH-FW-100	12.6	4.2	9.4	8.4	2.6	1.0	M4 or #8
	12.6	5.0	9.4	8.4	2.6	1.0	M5 or #10
CH-FW-140	14.2	6.3	11.5	7	3.9	1.5	M6 or 1/4
CH-FW-141	16.6	6.8	12.6	10.8	3.4	1.5	M6 or 1/4
CH-FW-21382	19	6.5	14.3	12.8	3.2	1.5	M6 or 1/4
CH-FW-516	21.6	8.2	15.7	15.7	4.5	2.0	M8 or 5/16
CH-FW-11421	22.6	8.2	17.5	15	4.7	2.0	M8 or 5/16
CH-FW-25382	25.1	8.2	19.1	16.5	5.0	2.0	M8 or 5/16
CH-FW-21384	27	10.5	21.4	18.5	4.4	2.0	M10 or 3/8
CH-FW-12265	25.1	10.2	19.1	16.5	5.0	2.0	M10 or 3/8
CH-FW-14412	31	10.2	22.2	22.9	8.0	3.0	M10 or 3/8
CH-FW-380	25.1	10.2	19.1	16.5	5.0	2.0	M10 or 3/8
	25.1	9.9	19.1	16.5	5.0	2.0	M10 or 3/8
	25.1	8.2	19.1	16.5	5.0	2.0	M8 or 5/16
CH-FW-120	31	8.2	24.7	22.9	6.5	3.0	M8 or 5/16
	31	13	24.7	22.9	6.5	3.0	M12 or 1/2
CH-FW-580	36	16	27	23.6	7.0	3.0	M16 or 5/8

Weld On For Solid-bar Clamps
螺栓架

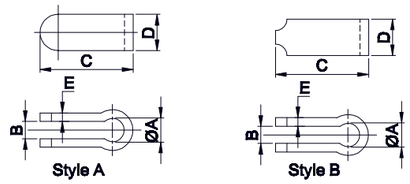

型號 MODEL	A	B	C	D	E	型號 STYLE	FOR SPINDLE
CH-BR-140	6.7	6	22	9.5	2	A	M6 or 1/4
CH-BR-141	6.5	4	25.4	12.7	2	A	M6 or 1/4
CH-BR-516	8.3	6	32.5	16	3	B	M8 or 5/16
CH-BR-380	10.5	8	42.5	20	3	A	M10 or 3/8
CH-BR-120	13	10	43	23	3	A	M12 or 1/2
CH-BR-580	16.5	10	50	31.8	3	A	M16 or 5/8

Rubber Cap
橡膠帽

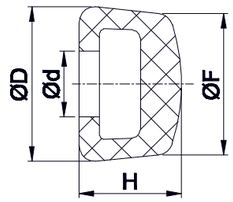

型號 MODEL	D	d	F	H	FOR SPINDLE
CH-NC-05	12.5	6.5	8	10	M6 or 1/4
CH-NC-140	16	6.4	14	11	M6 or 1/4
CH-NC-06	15	8.5	10	12	M8 or 5/16
CH-NC-516	19	8.0	17	12.5	M8 or 5/16
CH-NC-380	22	10	20.8	14	M10 or 3/8
CH-NC-120	30	13	26	16	M12 or 1/2

MODEL CORRESPONDENCE TABLE

型號對應表

CLAMPTEK	KAKUTA	CARR-LANE	DESTACO	AMF
CH-101-A	HV150	CL-150-VTC	201-U	90019
CH-101-AI	HV151-B	CL-151-VTC	201-B	
CH-101-AIT	HV151-BT		201-TB	
CH-101-AT	HV152-T	CL-152-VTC	201-T	
CH-101-ASS		CL-150-VTC-S	201-SS	
CH-13005	HV200	CL-200-VTC	305-U	
CH-13005-SS	HV200-2S	CL-200-VTC-S	305-USS	
CH-13007	HV300		307-U	
CH-13008	HV400		309-U	
CH-12050	HV250	CL-250-VTC	202	90514
CH-12050-U	HV250-U		202-U	90027
CH-12050-UL	HV253-UL		202-UL	
CH-12050-SS	HV250-2S	CL-250-VTC-S	202-SS	
CH-12055	HV251-B	CL-251-VTC	202-B	
CH-12070	HV252-T	CL-252-VTC	202-T	
CH-12075	HV251-BT		202-TB	
CH-12130	HV450	CL-450-VTC	207-U	90035
CH-12130-SS	HV450-2S	CL-450-VTC-S	207-USS	95067
CH-12131	HV452-T	CL-452-VTC	207-TU	
CH-12132	HV453-L	CL-453-VTC	207-UL	
CH-12133	HV452-TL		207-TUL	
CH-12135	HV451-B		207-UB	90233
CH-12136	HV451-BT		207-TUB	
CH-12137	HV451-BL	CL-451-VTC	207-ULB	
CH-12138	HV451-BTL		207-TULB	
CH-12140	HV350	CL-350-VTC	207-S	90431
CH-12141	HV352-T	CL-352-VTC	207-TS	
CH-12142	HV353-L	CL-353-VTC	207-L	
CH-12143	HV353-TL		207-TL	
CH-12145	HV351-B		207-SB	90555
CH-12146	HV351-BT		207-TSB	
CH-12147	HV351-BL	CL-351-VTC	207-LB	
CH-12148	HV351-BLT		207-TLB	
CH-12265	HV650	CL-650-VTC	210-U	90043
CH-12265-SS		CL-650-VTC-S	210-USS	
CH-12270	HV651-B	CL-651-VTC	204-UB	
CH-12275		CL-550-VTC	210-S	
CH-12280		CL-551-VTC	204-SB	
CH-12285	HV652-T	CL-652-VTC	210-TU	
CH-12290	HV651-BT		204-TUB	
CH-12295		CL-552-VTC	210-TS	
CH-12300			201-TSB	
CH-12315		CL-60O-VTC		

CLAMPTEK	KAKUTA	CARR-LANE	DESTACO	AMF
CH-12320		CL-610-VTC		
CH-10247	HV850	CL-850-VTC	247-U	90050
CH-10248	HV851-B	CL-851-VTC	247-UB	
CH-10249	HV750	CL-750-VTC	247-S	90456
CH-10250	HV751-B	CL-751-VTC	247-SB	
CH-101-J	HV1050	CL-105O-VTC	267-U	90068
CH-101-JS		CL-950-VTC	267	
CH-12421	N0.42K			
CH-11421	N0.42A			
CH-11412	N0.41B(S)			
CH-21382	NO.38B(S)			
CH-21382-SS	NO.38B(S)-2S			
CH-25382	NO.38B(L)			
CH-22382	NO.38S(S)			
CH-225-DI	HH 451-B	CL-451-HTC	225-UB	
CH-20235	HH 550	CL-550-HTC	235-U	93054
CH-20235-SS		CL-550-HTC-S	235-USS	
CH-20236	HH 551-BN	CL-551	235-UB	
CH-20100	NO.01			
CH-20400	NO.04			
CH-21383	N0.38(S)			
CH-26382	N0.38S(L)			
CH-20300	NO.03			
CH-201	HH 250	CL-250-HTC	205-U	93005
CH-201-SS	HH 250-2S	CL-250-HTC-S	205-USS	95141
CH-201-I	HH 251-B	CL-251-HTC	205-UB	93203
CH-201-L	HH 254-LE	CL-253-HTC	205-UL	
CH-201-R	HH 255-R	CL-252-HTC	205-UR	
CH-201-A	HH 150	CL-150-HTC	205-S	
CH-201-ASS	HH 150-2S	CL-150-HTC-S	205-SSS	
CH-201-AI	HH 151-B	CL-151-HTC	205-SB	
CH-201-AL	HH 154-LE	CL-153-HTC	205-SL	
CH-201-AR	HH 155-R	CL-152-HTC	205-SR	
CH-22502-B	HH500		227-U	93039
CH-201-B	HH350	CL-350-HTC	215-U	
CH-201-BSS	HH 350-2S	CL-350-HTC-S	215-USS	
CH-201-BI	HH 351-B	CL-351-HTC	215-UB	
CH-201-BS	HH 350-S	CL-3OO-HTC	215-S	
CH-201-BSI	HH 351-SB		215-SB	
CH-20820	N0.82	CL-475-HTC	317-U	
CH-225-D	HH450	CL-450-HTC	225-U	
CH-225-DSS	HH 450-2S	CH-45O-HTC-S	225-USS	
CH-23502-B	HH600		237-U	93047

CLAMPTEK	KAKUTA	CARR-LANE	DESTACO	AMF
CH-21502-B	HH400		217-U	93021
CH-22100		CL-350-HTC		
CH-301-AM	SL10	CL-50-SPC	601-M	
CH-302-FM	SL150	CL-150-SPC	605-M	
CH-36092	SL110		609	
CH-36003	SL105-2	CL-100-PC	603	
CH-36060	SL240	CL-275-SPC	620	
CH-30607M	SL310		607-M	
CH-36010M	SL250	CL-250-SPC	610-M	
CH-36012M	SL251-B		618-M	
CH-36330M	SL350	CL-350-TPC	630-M	
CH-36202M	FM50	CL-150-TPC	602-M	94300
CH-36204M	FM150	CL-250-TPC	604-M	94318
CH-36204M-SS	FM 150-2S		604-MSS	95364
CH-36224M	FM 250	CL-350-TPC	624-M	94334
CH-304-EM	SL200	CL-200-PC	608-M	
CH-304-CM	SL100	CL-100-PC	603-M	
CH-36020	N0.02			
CH-36006	NO.06			
CH-301-CL	SL50R			
CH-301-CR	SL50L			
CH-36070	SL07			
CH-302-DM	51BX(S)			
CH-31501M	50A			
CH-303-EM	50B			
CH-30513	N0.51C			
CH-304-HM	SL300	CL-300-PC		
CH-40323	FA 100	CL-100-PA	323	
CH-40323-SS	FA 100-2S	CL-100-PA-S	323-RSS	
CH-431	FA 200	CL-200-PA	331	
CH-431-SS	FA200-2S	CL-200-PA-S	331-SS	
CH-40341	FA 300	CL-300-PA	341	
CH-40341-SS	FA300-2S	CL-300-PA-S	341-SS	
CH-40370	FA 600	CL-400-PA	375	
CH-40380	FA 700	CL-500-PA	385	93856
CH-40370-LP		CL-500-PAA	375509/385102	
CH-40324	FA 130	CL-110-PA	324	
CH-40334	FA 230	CL-210-PA	334	
CH-40344	FA 330	CL-310-PA	344	
CH-451	PA 250	CL-250-PA	351	94540
CH-451-LP		CL-250-PA-L	351000	
CH-451-SS	PA-250-2S	CL-250-PA-S	351-SS	95422
CH-452	PA251-B	CL-251-PA	351-B	94680

CLAMPTEK	KAKUTA	CARR-LANE	DESTACO	AMF
CH-452-LP		CL-251-PA-L		
CH-452-SS	PA251-B2S		351-BSS	95455
CH-40371	PA 270		371	
CH-43810	PA 350	CL-350-PA	381	
CH-43810-LP		CL-350-PA-L	381000	
CH-43101	PA 150	CL-150-PA	301	
CH-50350	SA150	CL-50-PL	424	
CH-50360	SA250	CL-150-PL	441	
CH-50380	SA450	CL-254-PL	462	
CH-50450	SA550	CL-454-PL	463	
CH-70305			503-M	
CH-70310	V.2X		503-MB	90746
CH-70315	V.2X-B		503-MLB	90811
CH-70505			505-M	
CH-70510	V.3X		505-MB	90753
CH-70515	V.3X-B		505-MLB	90829
CH-70605			506-M	
CH-70610			506-MB	
CH-70615			506-MLB	
CH-75027M			527	
CH-75027M-SM			527-F	
CH-75048			548	
CH-75078			578	
CH-70203	NO.2			
CH-70201	NO.1			
CH-702-K	VAR1 3			
CH-702-C	VAR1 1			
CH-701-C	VAR1 1SB			
CH-701-D	VAR1 2SB			
CH-80325	SA 2	CL-325-PL-S	325	
CH-80325-SS			325-SS	
CH-10101-A		CL-400-PTC	812	
CH-1205OA		CL-500-PTC	802-U	
CH-12130A	AC 450	CL-1001-PTC	807-U	
CH-12132-A	AC 453-L	CL-1000-PTC		
CH-12265-A	AC 650		810-U	91991
CH-12275-A	AC 550		810-S	
CH-10247-A		CL-2000-PTC	847-U	
CH-10248-A		CL-2001-PTC	847-S	
CH-36301-A		CL-600-PPC	816	
CH-36003-A	AC 100-SL	CL-1500-PPC	803	
CH-36330-A	AC 350-SL		830	
CH-12050-UA	AC 250			

CLAMPTEK BRAND
嘉剛研發產品

快速手動夾鉗 Toggle Clamps

快速氣動夾鉗 Pneumatic Toggle Clamps

油壓缸系列 Hydraulic Clamps Series

氣壓缸系列 Pneumatic Clamps Series

液壓站 Hydraulic Power Units

CLAMPTEK AGENCY
嘉剛5大代理產品

德國HALDER標准件
HALDER Standard Products

盈錫精密鎖緊螺母
Yinsh Lock Nuts

東培精密軸承
TPI Bearing

弘旺連軸器
HW Coupling

惟隆主軸
WLT Spindles

CLAMPTEK LEADING GLOBAL CLAMP TECHNIQUE
嘉剛引領全球夾具技術